SWS 12G-OP NB

Linear bushing

TYPE: Shaft guidance systems, Linear bushing, Standard, Open type for support rail, Type SW..OP, American standard, Corrosion resistance, Plastic cage (NB)

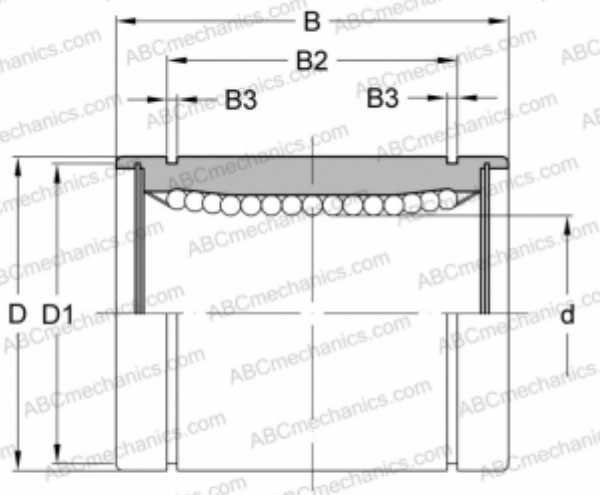

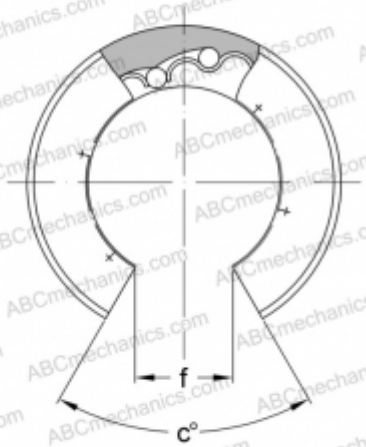

Technical specification

DIMENSIONS, MM	
d	19,050
D	31,750
B	41,275
D1	29,870
B2	29,610
B3	1,422
f	11,113
c	60
WEIGHT, KG	0,086
MANUFACTURER	NB