SWS 32GW NB

Linear bushing

TYPE: Shaft guidance systems, Linear bushing, Standard, Close type, double length, Type SW..W, American standard, Corrosion resistance, Plastic cage (NB)

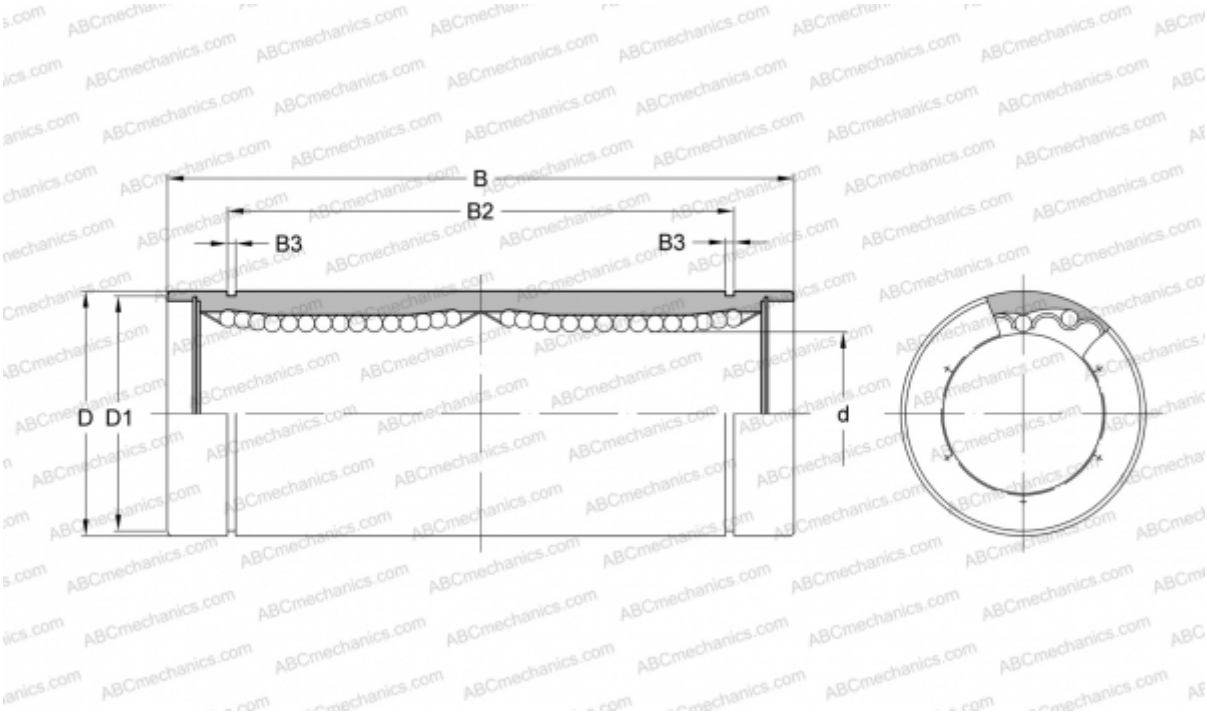

Technical specification

DIMENSIONS, MM	
d	50,800
D	76,200
B	196,850
D1	72,085
B2	162,138
B3	2,616
WEIGHT, KG	2,350
MANUFACTURER	NB