SWSF 16G NB

Linear bushing

TYPE: Shaft guidance systems, Linear bushing, With flange, Circular type, Type SWF, American standard, Corrosion resistance, Plastic cage (NB)

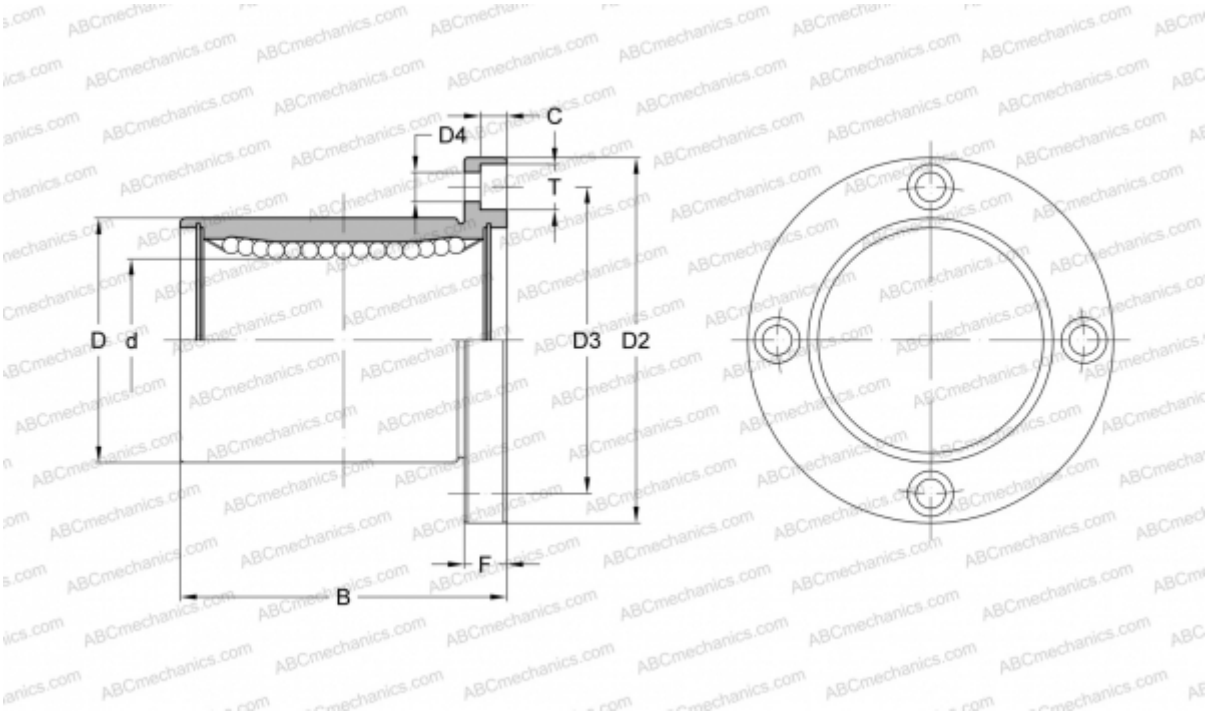

Technical specification

DIMENSIONS, MM	
d	25,400
D	39,688
B	57,150
D2	63,500
D3	51,594
D4	5,556
T	8,731
C	5,159
F	7.938
WEIGHT, KG	0,325
MANUFACTURER	NB