SWK 40 NB

Linear bushing

TYPE: Shaft guidance systems, Linear bushing, With flange, Square type, Type SWK, American standard, Steel cage (NB)

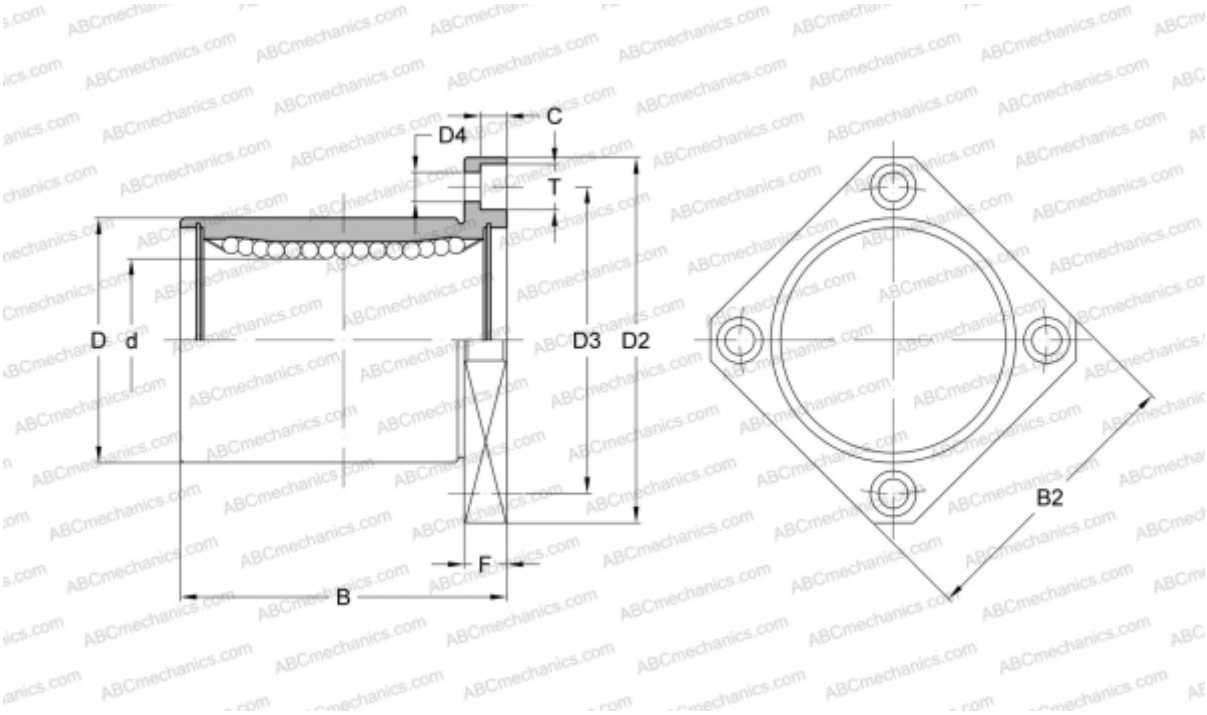

Technical specification

DIMENSIONS, MM	
d	63,500
D	95,250
B	127,000
D2	136,525
D3	115,887
D4	10,319
B2	111,125
T	15,875
C	9,525
F	19.05
WEIGHT, KG	3,200
MANUFACTURER	NB