# SWK 6G NB

Linear bushing

TYPE: Shaft guidance systems, Linear bushing, With flange, Square type, Type SWK, American standard, Plastic cage (NB)

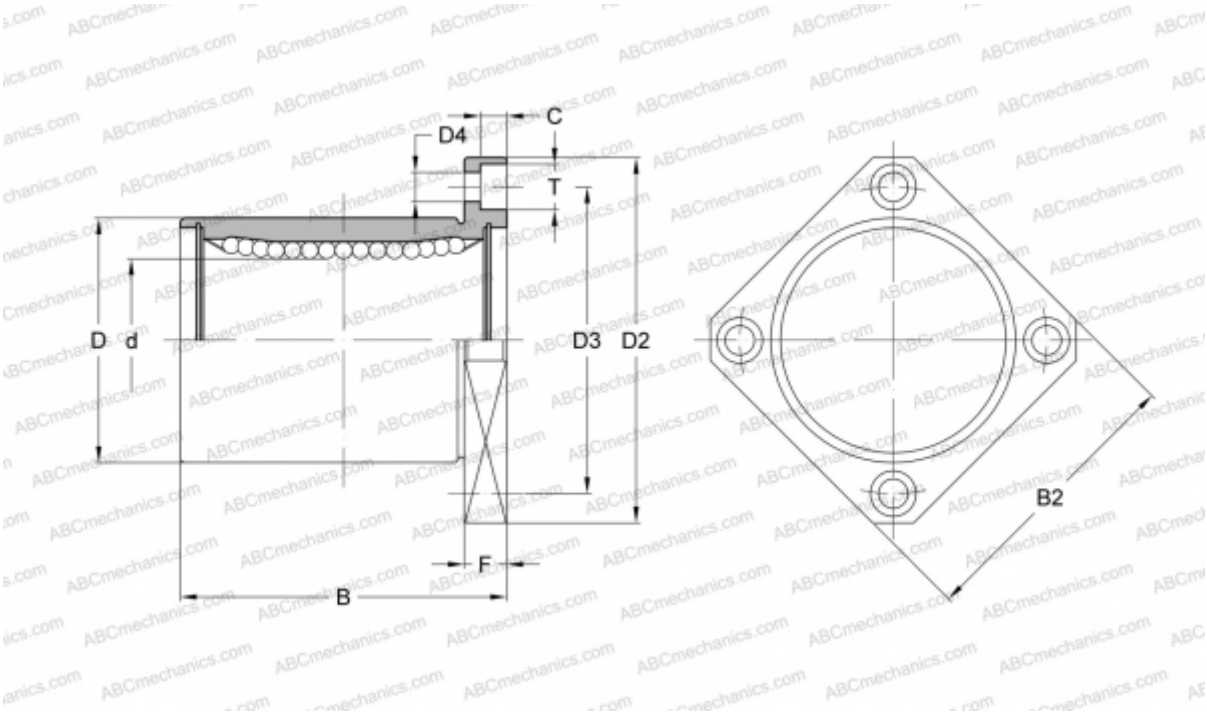


## Technical specification

| DIMENSIONS, MM | |
|---|---|
| d | 9,525 |
| D | 15,875 |
| B | 22,225 |
| D2 | 38,100 |
| D3 | 26,988 |
| D4 | 4,763 |
| B2 | 31,750 |
| T | 7,541 |
| C | 4,366 |
| F | 6.35 |
| **WEIGHT, KG** | 0,032 |
| **MANUFACTURER** | NB |