SWSK 32 NB

Linear bushing

TYPE: Shaft guidance systems, Linear bushing, With flange, Square type, Type SWK, American standard, Corrosion resistance, Stainless steel cage (NB)

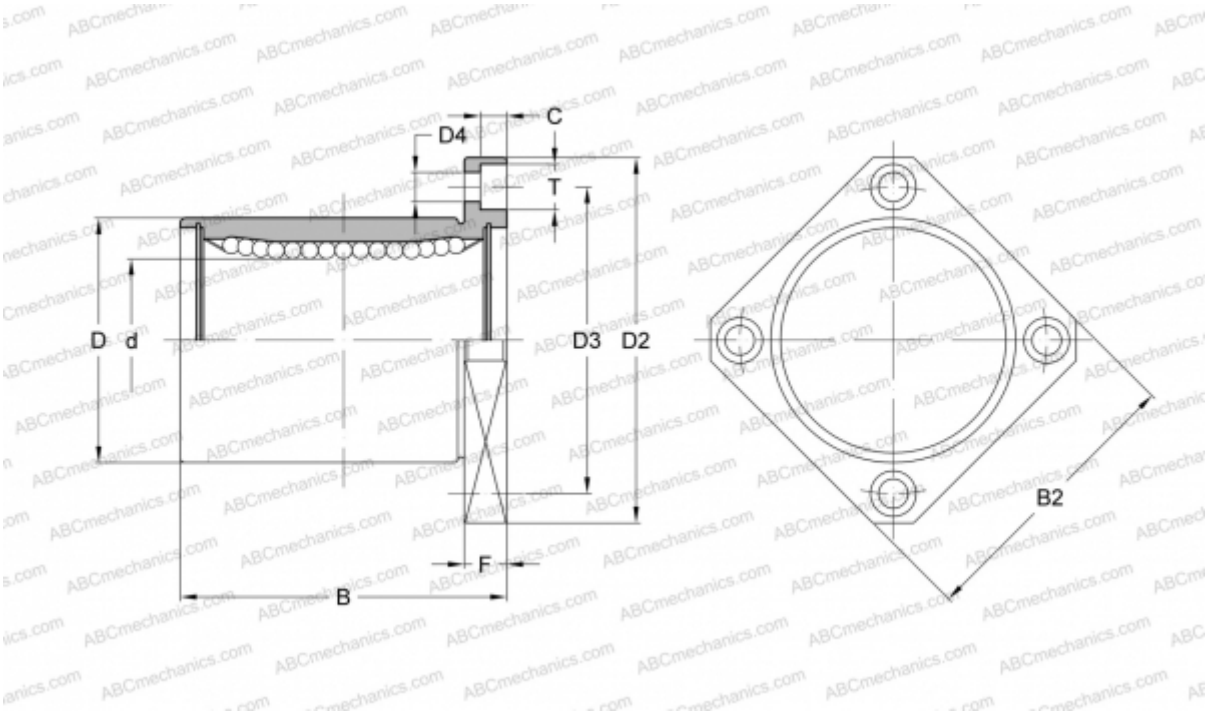

Technical specification

DIMENSIONS, MM	
d	50,800
D	76,200
B	101,600
D2	111,125
D3	93,662
D4	8,731
B2	88,900
T	12,700
C	8,334
F	12.7
WEIGHT, KG	1,580
MANUFACTURER	NB