SWK 16GW NB

Linear bushing

TYPE: Shaft guidance systems, Linear bushing, With flange, Square type, double length, Type SWK..W, American standard, Plastic cage (NB)

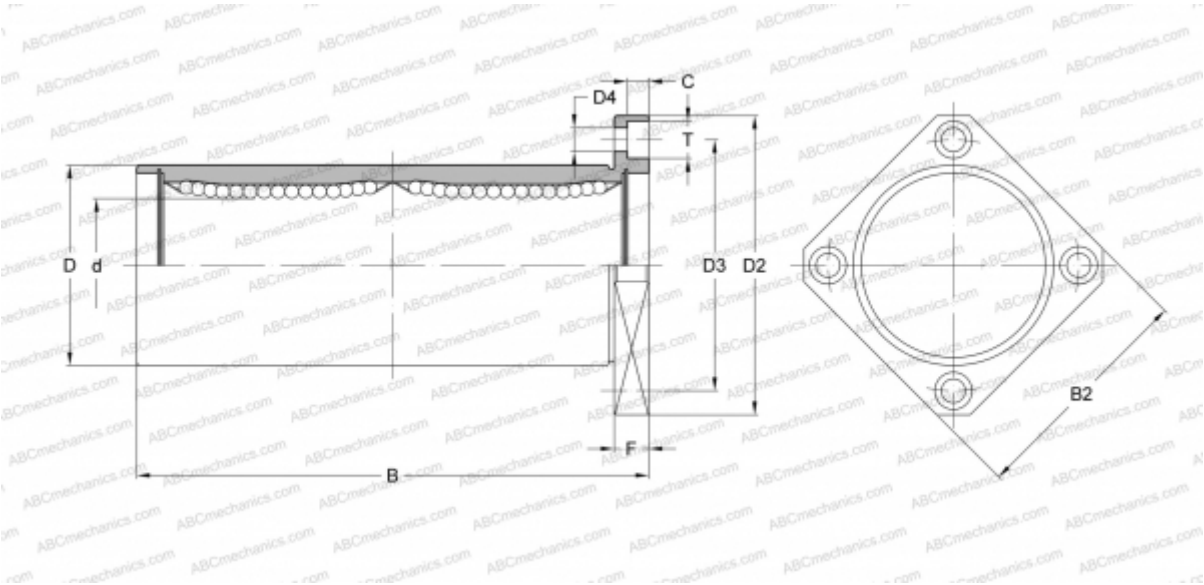

Technical specification

DIMENSIONS, MM	
d	25,400
D	39,688
B	108,744
D2	63,500
D3	51,594
D4	5,556
B2	50,800
T	8,731
C	5,159
F	7.938
WEIGHT, KG	0,470
MANUFACTURER	NB