SWSK 4W NB

Linear bushing

TYPE: Shaft guidance systems, Linear bushing, With flange, Square type, double length, Type SWK..W, American standard, Corrosion resistance, Stainless steel cage (NB)

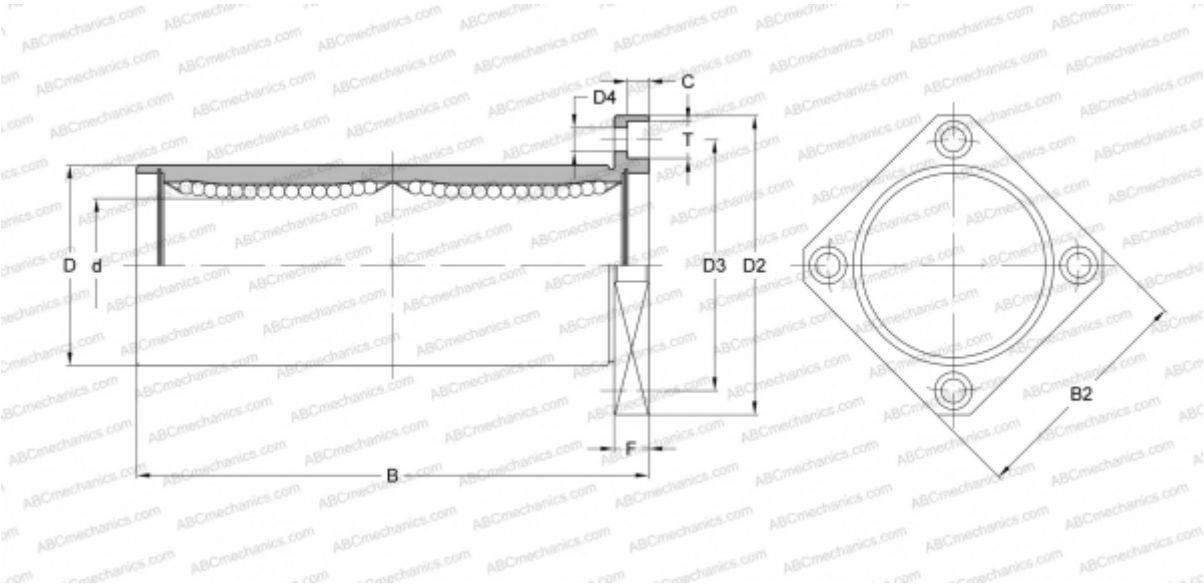

Technical specification

DIMENSIONS, MM	
d	6,350
D	12,700
B	34,925
D2	31,750
D3	22,225
D4	3,969
B2	25,400
T	6,350
C	3,572
F	5.556
WEIGHT, KG	0,033
MANUFACTURER	NB