GM 8W UU NB

Linear bushing

TYPE: Shaft guidance systems, Linear bushing, Standard, Close type, double length, Type GM..W (NB)

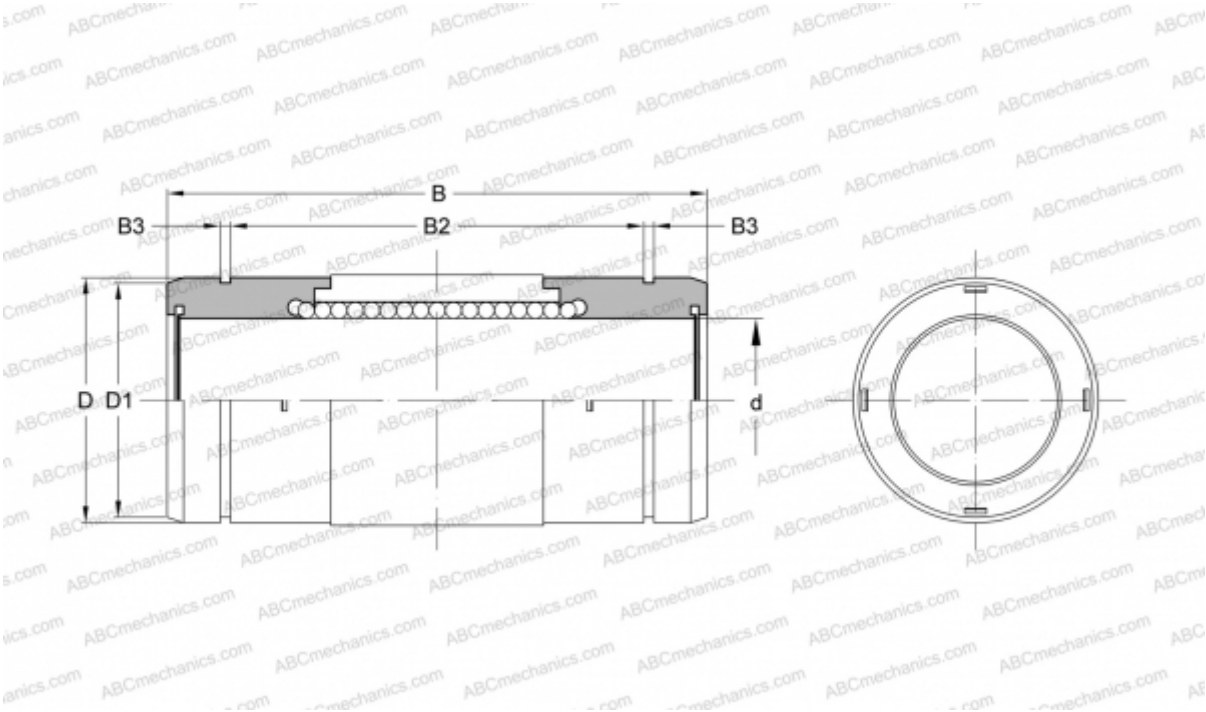

Technical specification

DIMENSIONS, MM	
d	8,000
D	15,000
B	36,000
D1	14,300
B2	27,300
B3	1,100
WEIGHT, KG	0,018
MANUFACTURER	NB