GW 4 NB

Linear bushing

TYPE: Shaft guidance systems, Linear bushing, Standard, Close type, Type GW, American standard (NB)

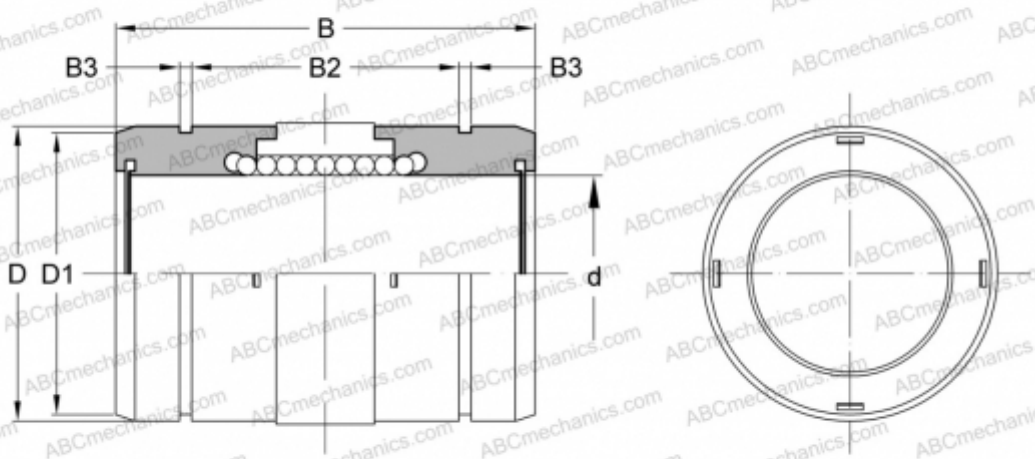

Technical specification

DIMENSIONS, MM	
d	6,350
D	12,700
B	19,050
D1	11,906
B2	10,996
B3	0,992
WEIGHT, KG	42,465
MANUFACTURER	NB