LMBS6 UU SAMICK

Linear bushing

TYPE: Shaft guidance systems, Linear bushing, Self aligning, Close type, Type LMBS, American standard (SAMICK)

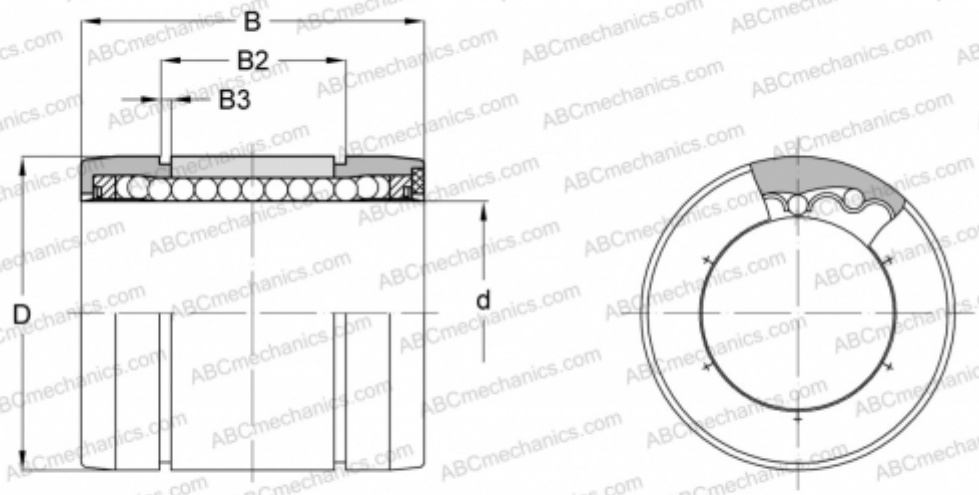

Technical specification

DIMENSIONS, MM	
d	9,525
D	15,875
B	22,225
B2	17,755
B3	0,991
WEIGHT, KG	0,009
MANUFACTURER	SAMICK