LME50 UU SAMICK

Linear bushing

TYPE: Shaft guidance systems, Linear bushing, Standard, Close type, Type LME, European standard, Plastic cage (SAMICK)

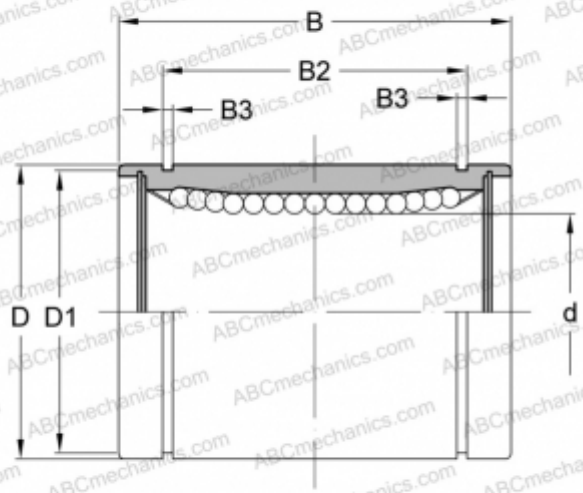

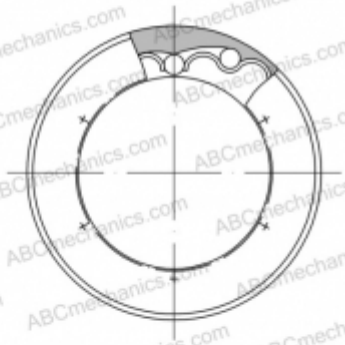

Technical specification

DIMENSIONS, MM	
d	50,000
D	75,000
B	100,000
D1	72,000
B2	77,600
B3	2,650
WEIGHT, KG	1,130
MANUFACTURER	SAMICK