LM6 UU A SAMICK

Linear bushing

TYPE: Shaft guidance systems, Linear bushing, Standard, Close type, Type LM, Asian standard, Steel cage (SAMICK)

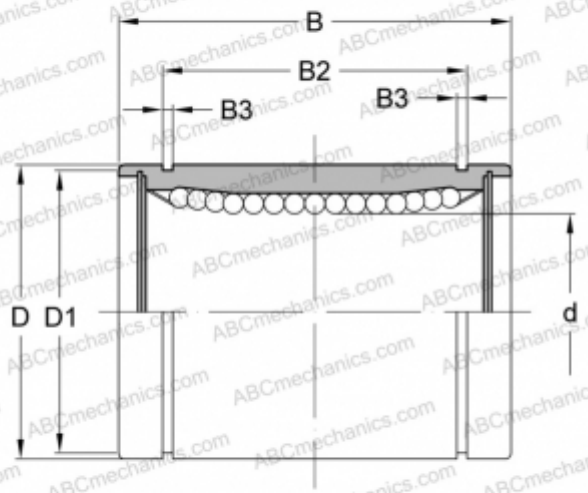

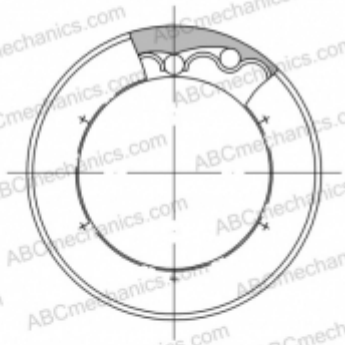

Technical specification

DIMENSIONS, MM	
d	6,000
D	12,000
B	19,000
D1	11,500
B2	13,500
B3	1,100
WEIGHT, KG	0,008
MANUFACTURER	SAMICK