LME5 UU AJ SAMICK

Linear bushing

TYPE: Shaft guidance systems, Linear bushing, Standard, Adjustable type, Type LME..AJ, European standard, Plastic cage (SAMICK)

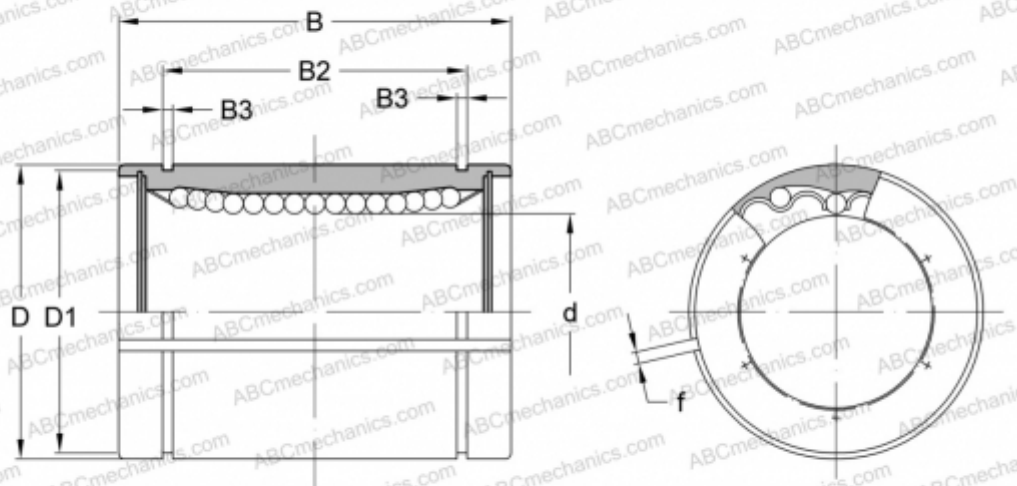

Technical specification

DIMENSIONS, MM	
d	5,000
D	12,000
B	22,000
D1	11,500
B2	14,500
B3	1,100
f	1,000
WEIGHT, KG	0,012
MANUFACTURER	SAMICK