LME25 UU AJ A SAMICK

Linear bushing

TYPE: Shaft guidance systems, Linear bushing, Standard, Adjustable type, Type LME..AJ, European standard, Steel cage (SAMICK)

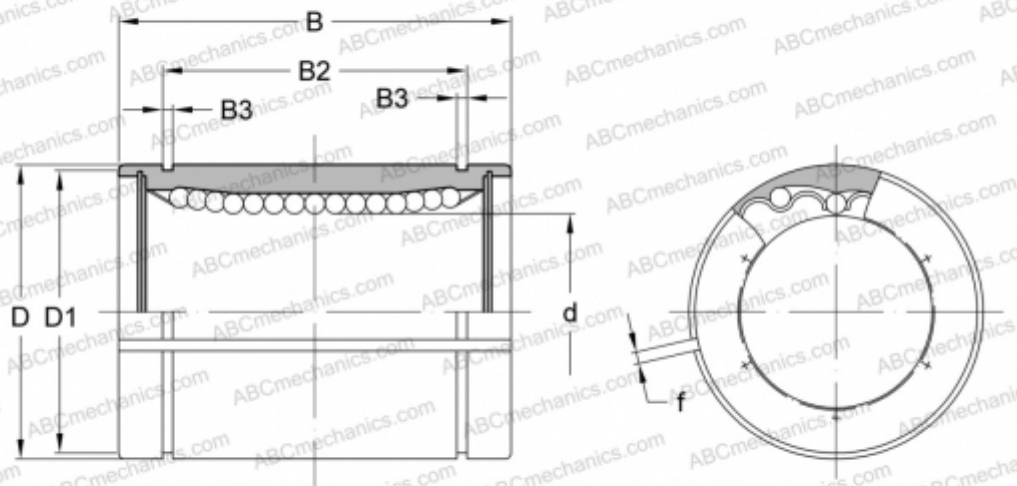

Technical specification

DIMENSIONS, MM	
d	25,000
D	40,000
B	58,000
D1	37,500
B2	44,100
B3	1,850
f	2,000
WEIGHT, KG	0,215
MANUFACTURER	SAMICK