LME12 UU OP SAMICK

Linear bushing

TYPE: Shaft guidance systems, Linear bushing, Standard, Open type for support rail, Type LME..OP, European standard, Plastic cage (SAMICK)

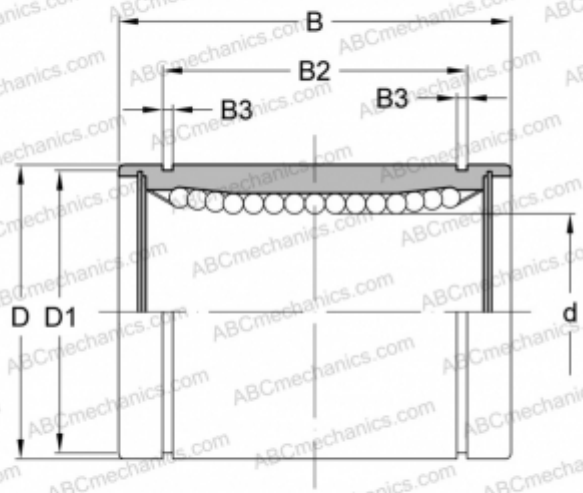

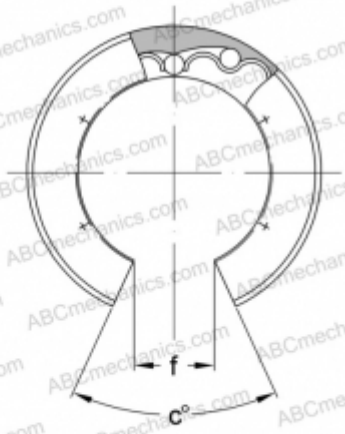

Technical specification

DIMENSIONS, MM	
d	12,000
D	22,000
B	32,000
D1	21,000
B2	22,900
B3	1,300
f	7,500
c	78
WEIGHT, KG	0,041
MANUFACTURER	SAMICK