LMEF60 UU SAMICK

Linear bushing

TYPE: Shaft guidance systems, Linear bushing, With flange, Circular type, Type LMEF, European standard, Plastic cage (SAMICK)

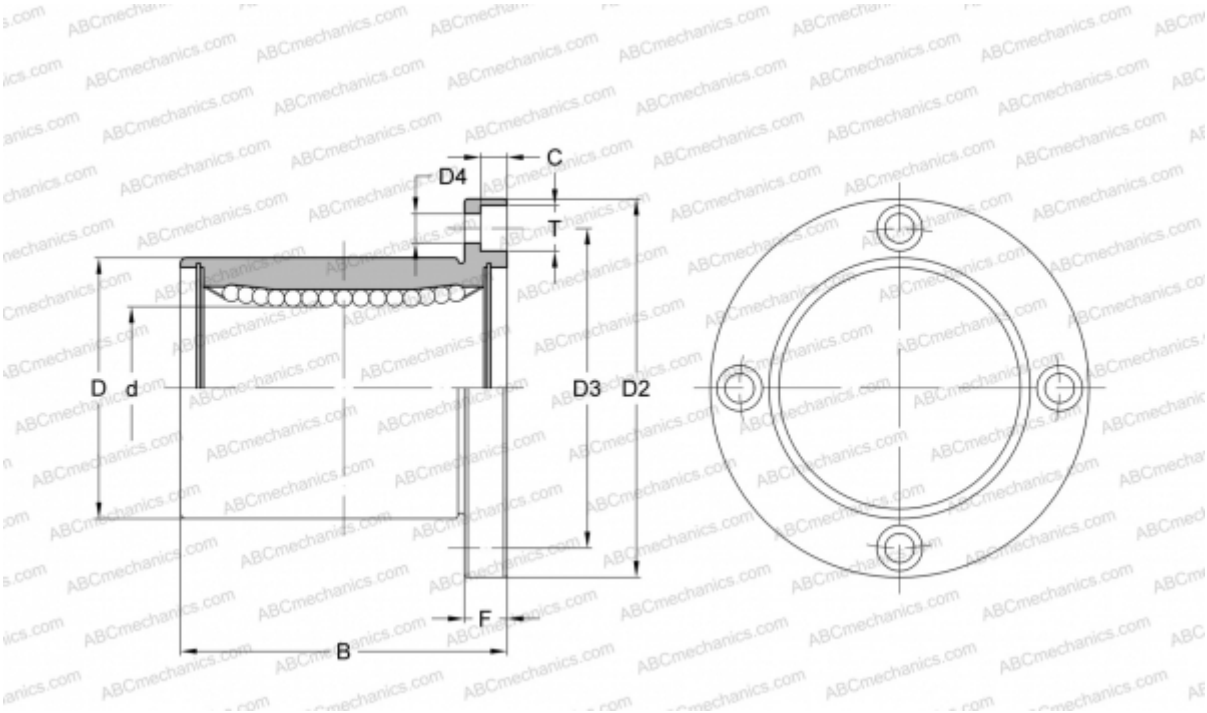

Technical specification

DIMENSIONS, MM	
d	60,000
D	90,000
B	125,000
D2	134,000
D3	112,000
D4	11,000
T	17,500
C	10,800
F	18
WEIGHT, KG	3,180
MANUFACTURER	SAMICK