# LMF40L UU SAMICK

Linear bushing

TYPE: Shaft guidance systems, Linear bushing, With flange, Circular type, double length, Type LMF..L, Asian standard, Plastic cage (SAMICK)

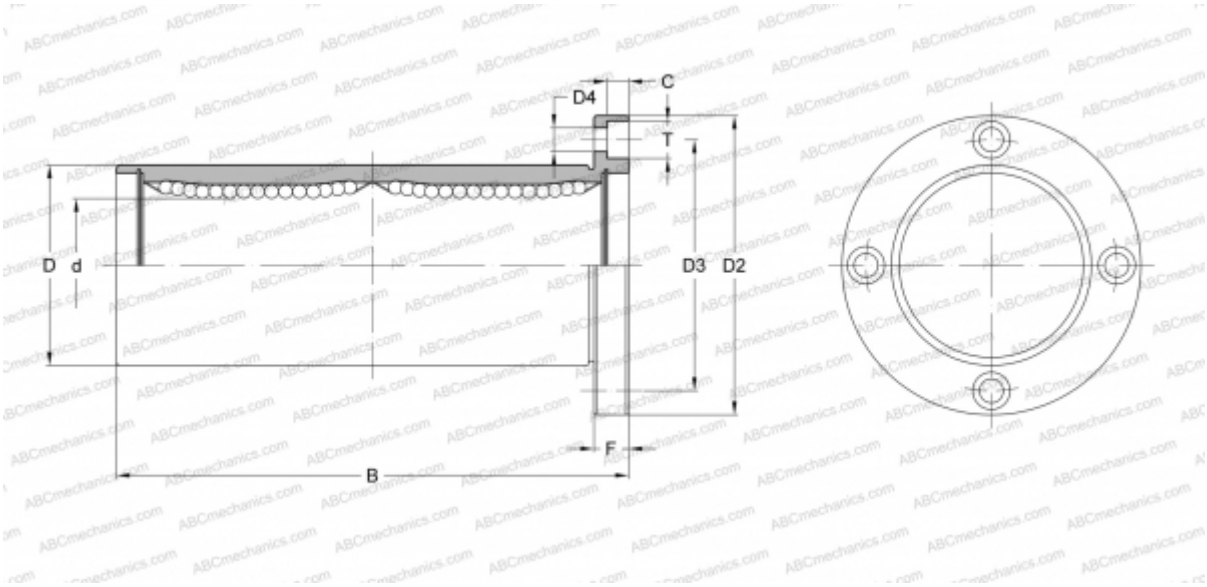


## Technical specification

| DIMENSIONS, MM | |
|---|---|
| d | 40,000 |
| D | 60,000 |
| B | 154,000 |
| D2 | 96,000 |
| D3 | 78,000 |
| D4 | 9,000 |
| T | 14,000 |
| C | 8,600 |
| F | 13 |

| | |
|---|---|
| **WEIGHT, KG** | 1,560 |
| **MANUFACTURER** | SAMICK |