LMH10L UU SAMICK

Linear bushing

TYPE: Shaft guidance systems, Linear bushing, With flange, Oval type, double length, Type LMH..L, Asian standard, Plastic cage (SAMICK)

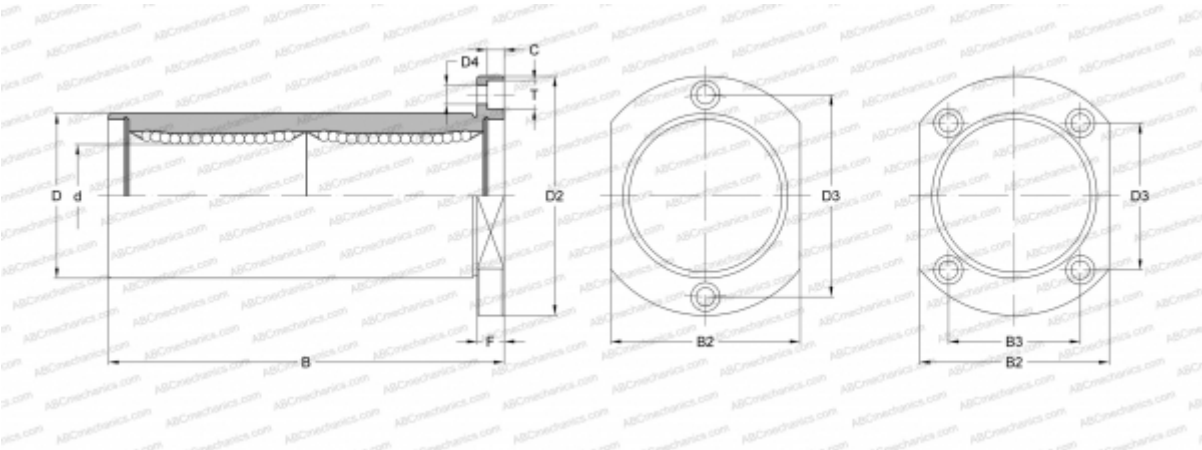

Technical specification

DIMENSIONS, MM	
d	10,000
D	19,000
B	55,000
D2	40,000
D3	29,000
D4	4,500
B2	25,000
T	8,000
C	4,400
F	6
WEIGHT, KG	0,105
MANUFACTURER	SAMICK