LMH20L UU SAMICK

Linear bushing

TYPE: Shaft guidance systems, Linear bushing, With flange, Oval type, double length, Type LMH..L, Asian standard, Plastic cage (SAMICK)

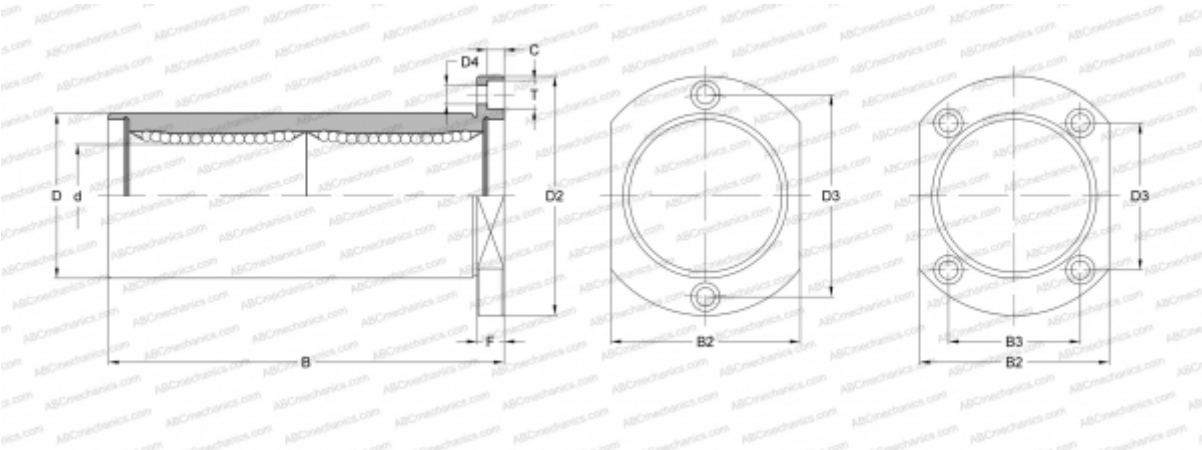

Technical specification

DIMENSIONS, MM	
d	20,000
D	32,000
B	80,000
D2	54,000
D3	36,000
D4	5,500
B2	38,000
B3	24,000
T	9,500
C	5,400
F	8
WEIGHT, KG	0,260
MANUFACTURER	SAMICK