LMH8L UU A SAMICK

Linear bushing

TYPE: Shaft guidance systems, Linear bushing, With flange, Oval type, double length, Type LMH..L, Asian standard, Steel cage (SAMICK)

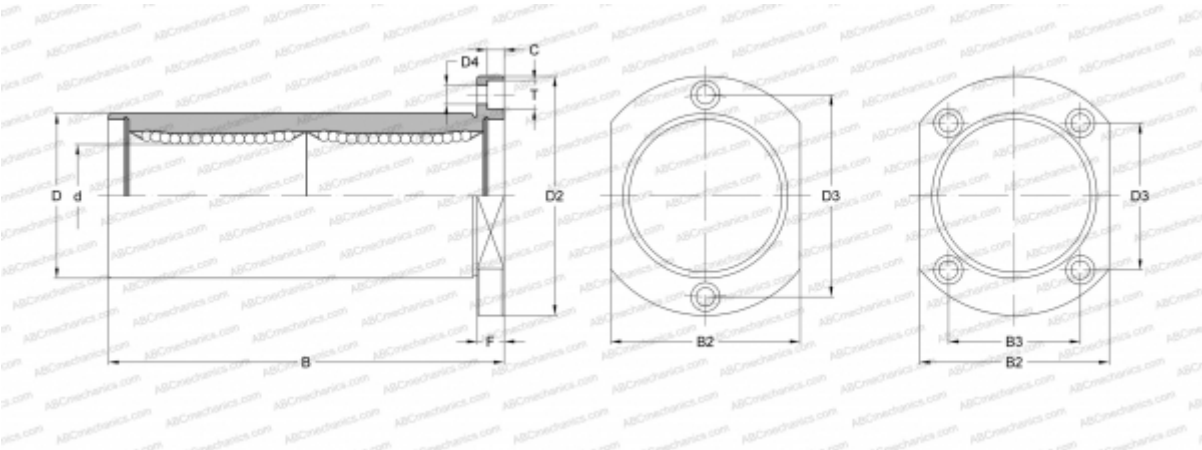

Technical specification

DIMENSIONS, MM	
d	8,000
D	15,000
B	45,000
D2	32,000
D3	24,000
D4	3,400
B2	21,000
T	6,500
C	3,300
F	5
WEIGHT, KG	53,000
MANUFACTURER	SAMICK