LMH25L UU A SAMICK

Linear bushing

TYPE: Shaft guidance systems, Linear bushing, With flange, Oval type, double length, Type LMH..L, Asian standard, Steel cage (SAMICK)

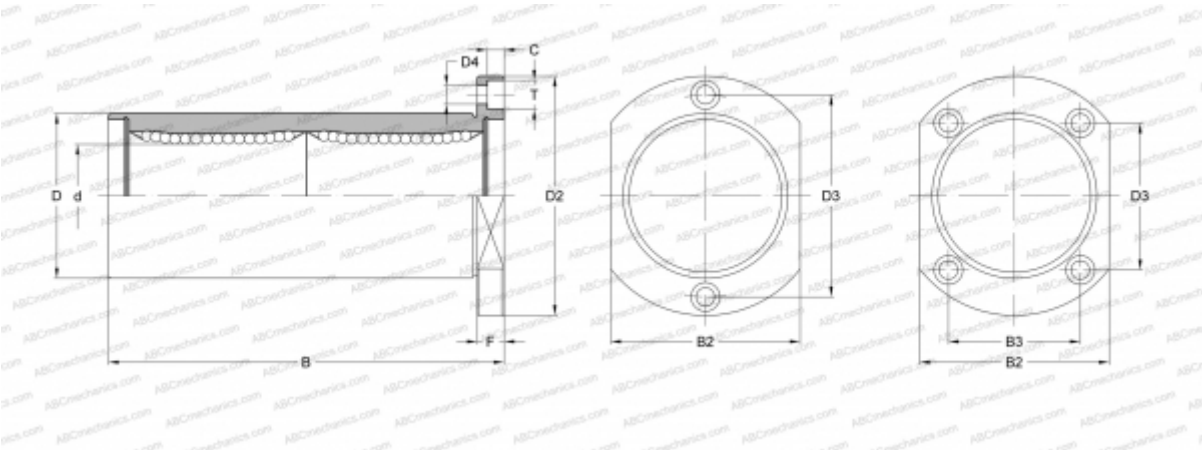

Technical specification

DIMENSIONS, MM	
d	25,000
D	40,000
B	112,000
D2	62,000
D3	40,000
D4	5,500
B2	46,000
B3	32,000
T	9,500
C	5,400
F	8

WEIGHT, KG	515,000
MANUFACTURER	SAMICK