LMEFP16 UU SAMICK

Linear bushing

TYPE: Shaft guidance systems, Linear bushing, Pilot flange location, Circular type, Type LMEFP, European standard, Plastic cage (SAMICK)

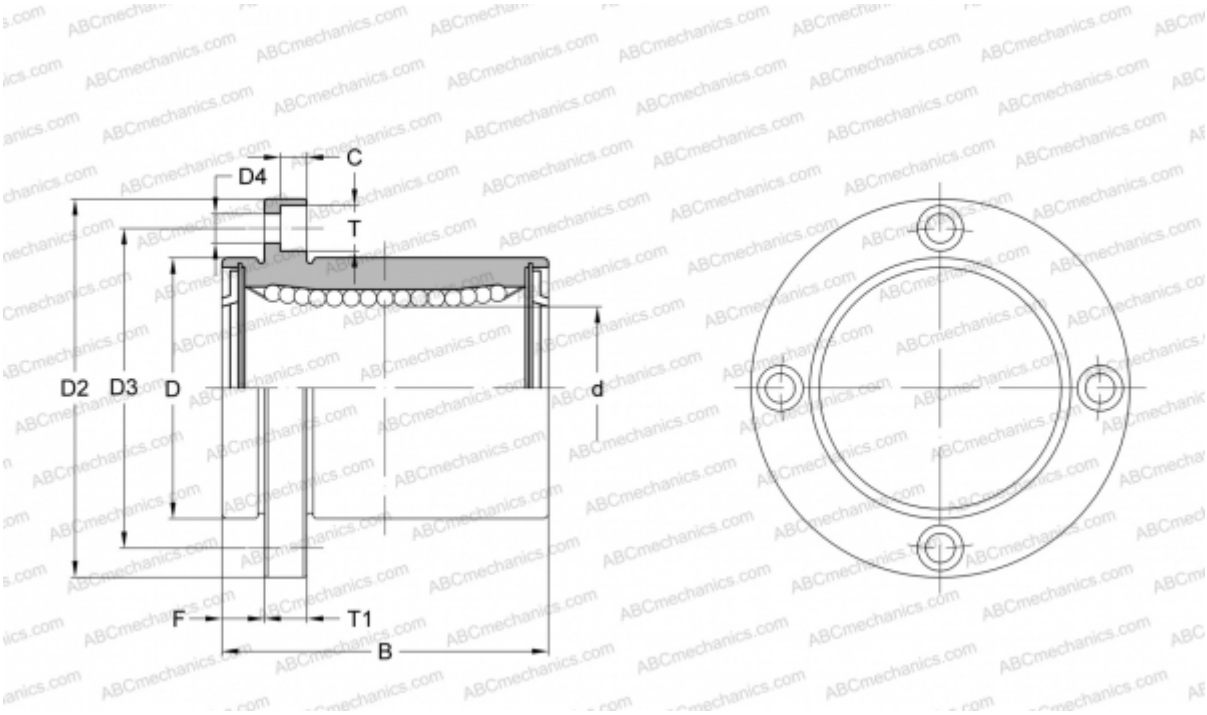

Technical specification

DIMENSIONS, MM	
d	16,000
D	26,000
B	36,000
D2	46,000
D3	36,000
D4	4,500
T	8,000
T1	6,000
C	4,400
F	6
WEIGHT, KG	0,120
MANUFACTURER	SAMICK