LMEFP8 UU A SAMICK

Linear bushing

TYPE: Shaft guidance systems, Linear bushing, Pilot flange location, Circular type, Type LMEFP, European standard, Steel cage (SAMICK)

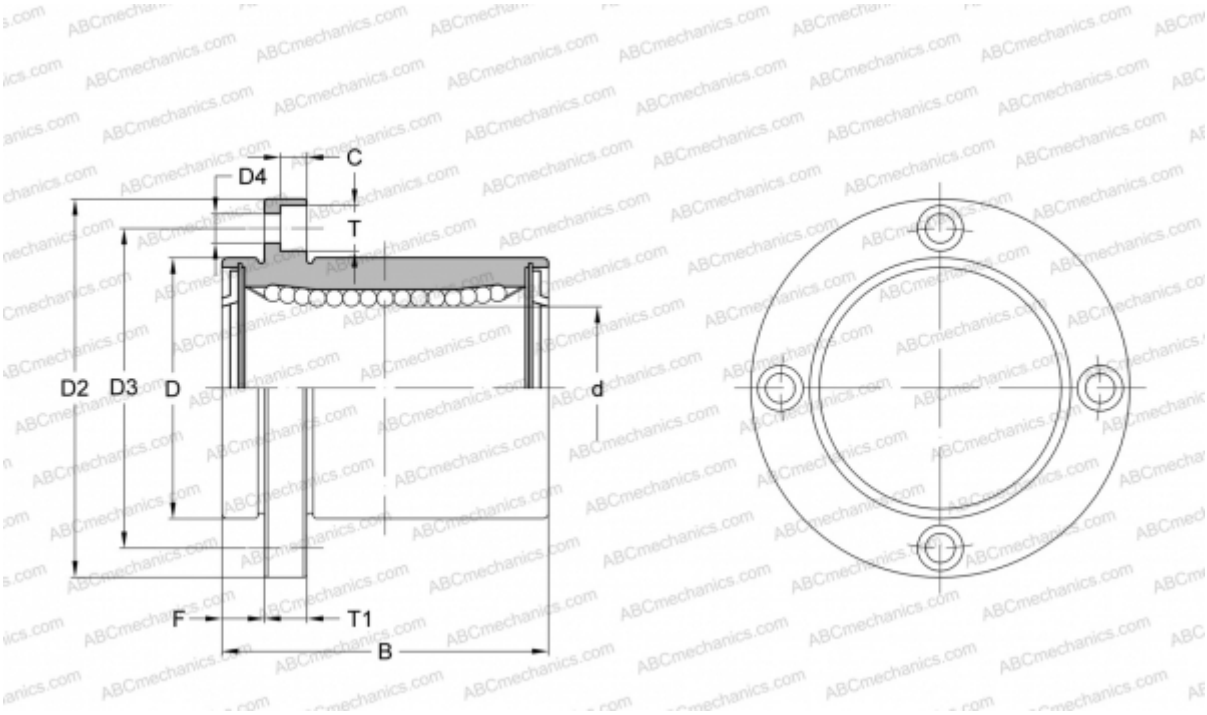

Technical specification

DIMENSIONS, MM	
d	8,000
D	16,000
B	25,000
D2	32,000
D3	24,000
D4	3,400
T	6,500
T1	5,000
C	3,300
F	5
WEIGHT, KG	0,044
MANUFACTURER	SAMICK