LMFP13 UU SAMICK

Linear bushing

TYPE: Shaft guidance systems, Linear bushing, Pilot flange location, Circular type, Type LMFP, Asian standard, Plastic cage (SAMICK)

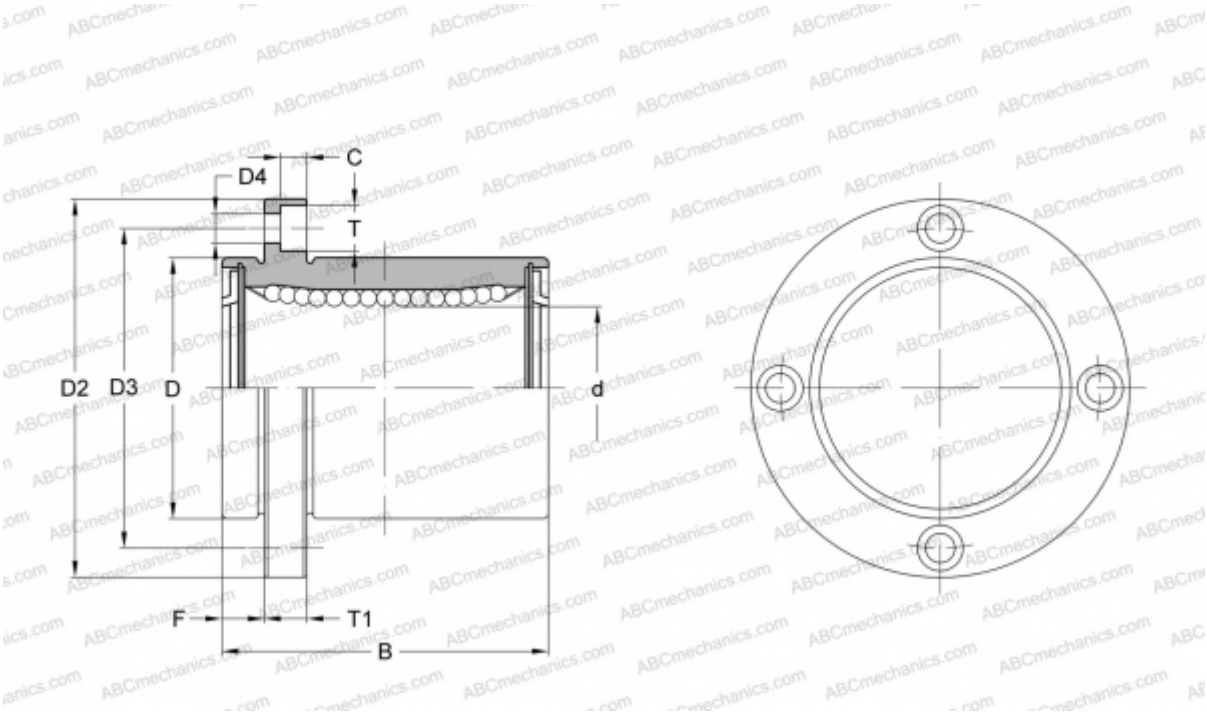

Technical specification

DIMENSIONS, MM	
d	13,000
D	23,000
B	32,000
D2	43,000
D3	33,000
D4	4,500
T	8,000
T1	6,000
C	4,400
F	6
WEIGHT, KG	0,094
MANUFACTURER	SAMICK