LMFP16 UU SAMICK

Linear bushing

TYPE: Shaft guidance systems, Linear bushing, Pilot flange location, Circular type, Type LMFP, Asian standard, Plastic cage (SAMICK)

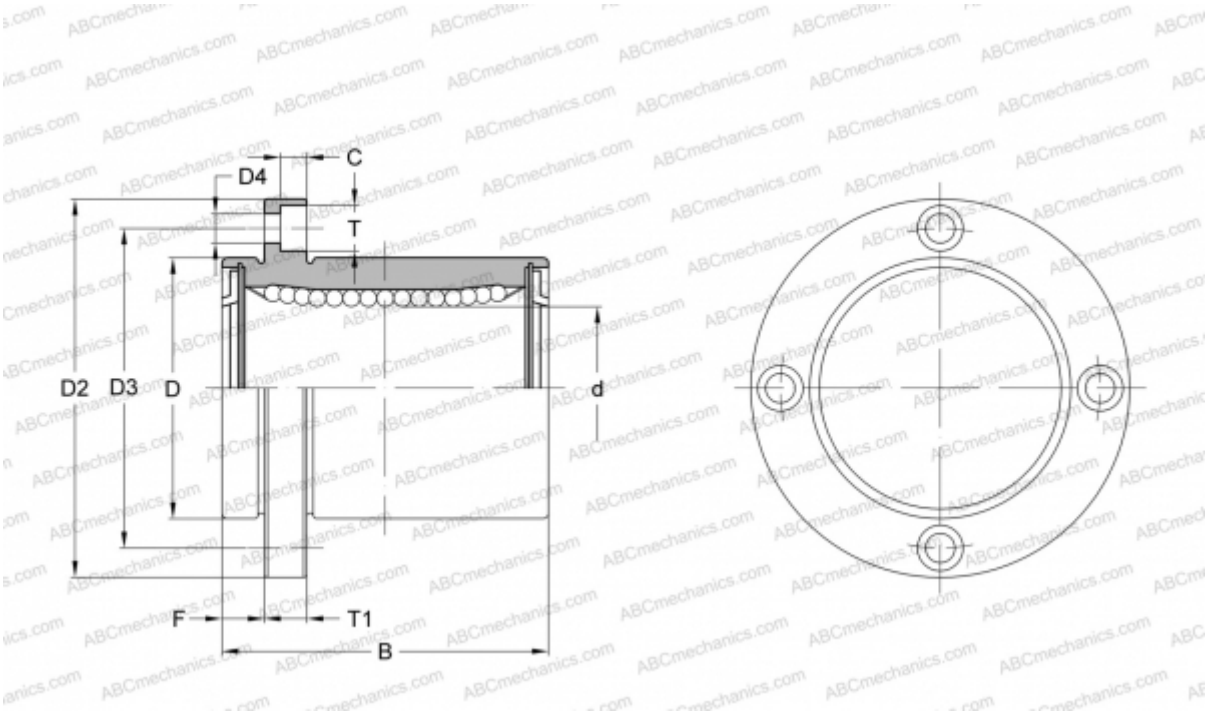

Technical specification

DIMENSIONS, MM	
d	16,000
D	28,000
B	37,000
D2	48,000
D3	38,000
D4	4,500
T	8,000
T1	6,000
C	4,400
F	6
WEIGHT, KG	0,134
MANUFACTURER	SAMICK