LMFP20 UU SAMICK

Linear bushing

TYPE: Shaft guidance systems, Linear bushing, Pilot flange location, Circular type, Type LMFP, Asian standard, Plastic cage (SAMICK)

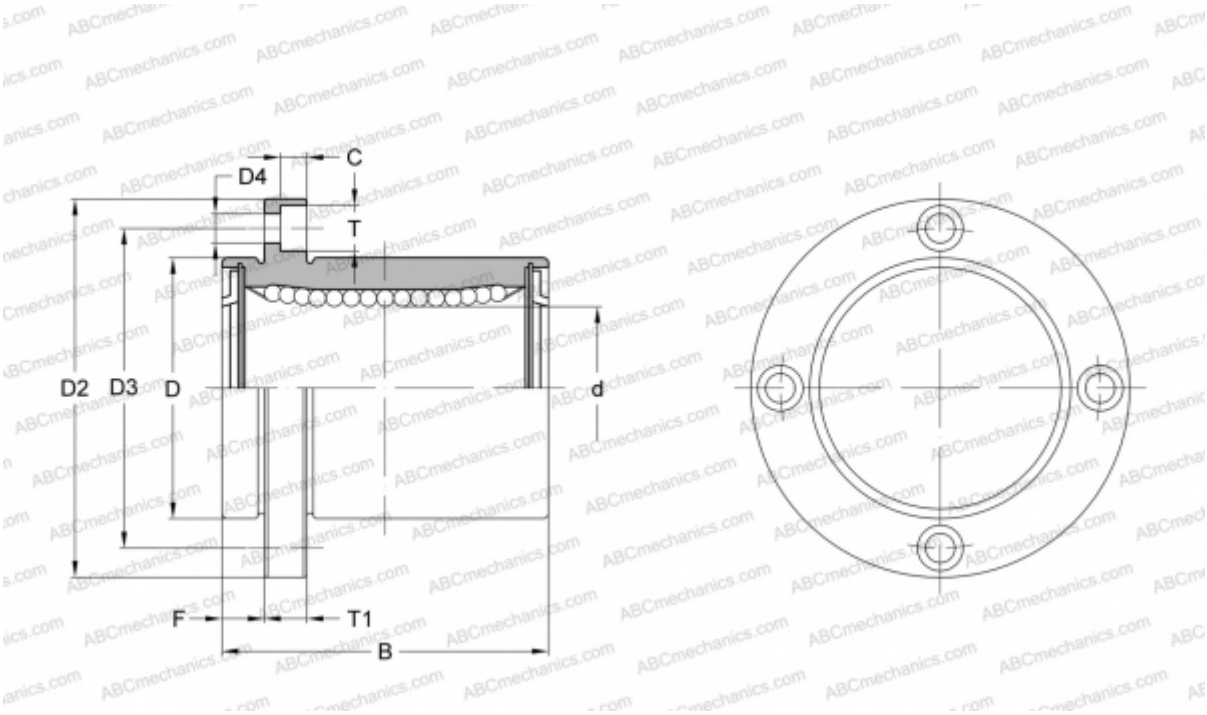

Technical specification

DIMENSIONS, MM	
d	20,000
D	32,000
B	42,000
D2	54,000
D3	43,000
D4	5,500
T	9,500
T1	8,000
C	5,400
F	8
WEIGHT, KG	0,180
MANUFACTURER	SAMICK