LMFP10L UU A SAMICK

Linear bushing

TYPE: Shaft guidance systems, Linear bushing, Pilot flange location, Circular type, double length, Type LMFP..L, Asian standard, Steel cage (SAMICK)

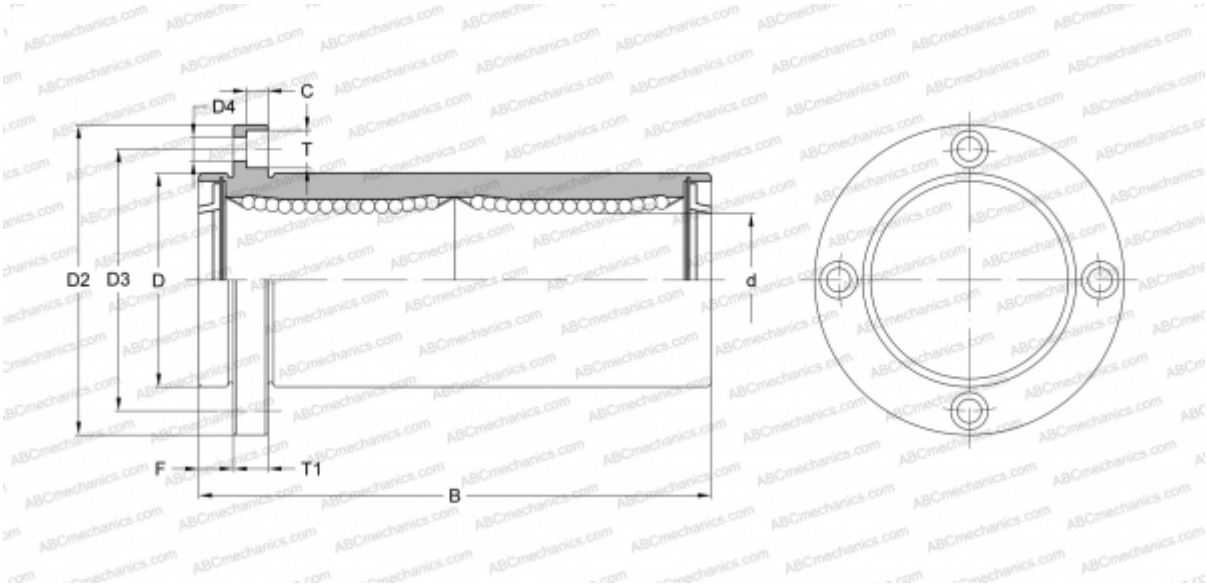

Technical specification

DIMENSIONS, MM	
d	10,000
D	19,000
B	55,000
D2	40,000
D3	29,000
D4	4,500
T	8,000
T1	6,000
C	4,400
F	6
WEIGHT, KG	0,105
MANUFACTURER	SAMICK