# LMKP25 UU A SAMICK

Linear bushing

TYPE: Shaft guidance systems, Linear bushing, Pilot flange location, Square type, Type LMKP, Asian standard, Steel cage (SAMICK)

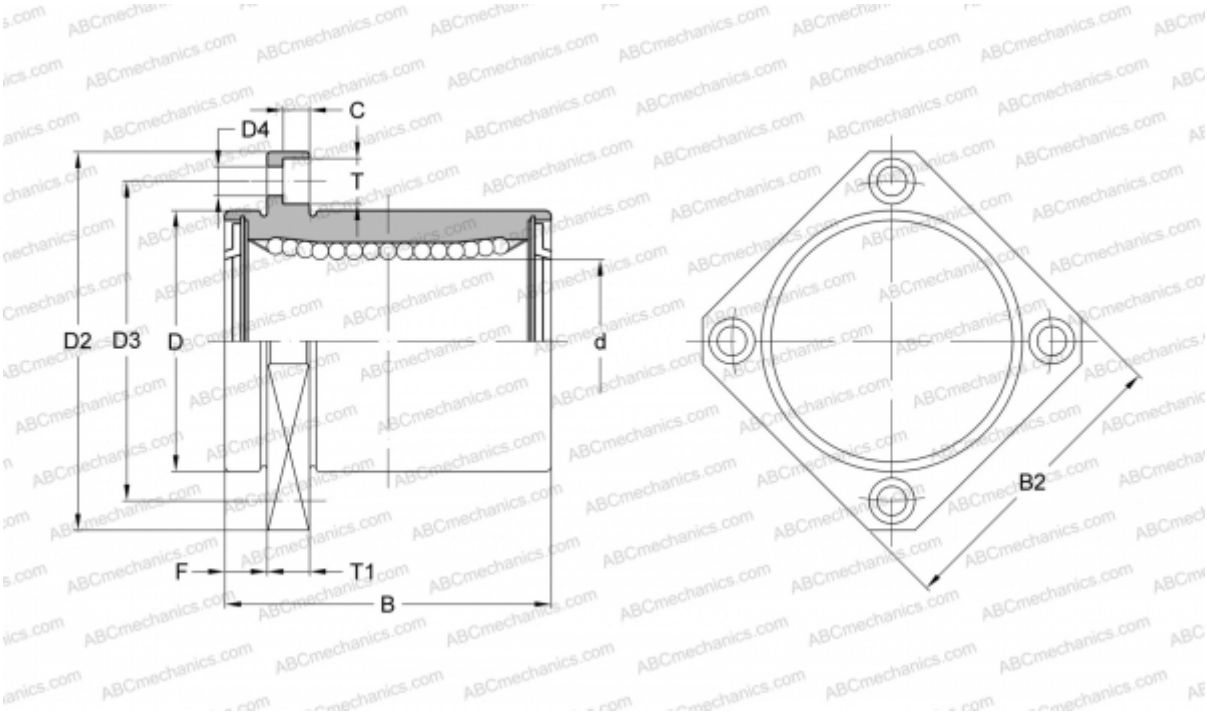


## Technical specification

| DIMENSIONS, MM | |
|---|---|
| d | 25,000 |
| D | 40,000 |
| B | 59,000 |
| D2 | 62,000 |
| D3 | 51,000 |
| D4 | 5,500 |
| B2 | 50,000 |
| T | 9,500 |
| T1 | 8,000 |
| C | 5,400 |
| F | 8 |

| | |
|---|---|
| **WEIGHT, KG** | 0,340 |
| **MANUFACTURER** | SAMICK |