# LMKP13L UU A SAMICK

Linear bushing

TYPE: Shaft guidance systems, Linear bushing, Pilot flange location, Square type, double length, Type LMKP..L, Asian standard, Steel cage (SAMICK)

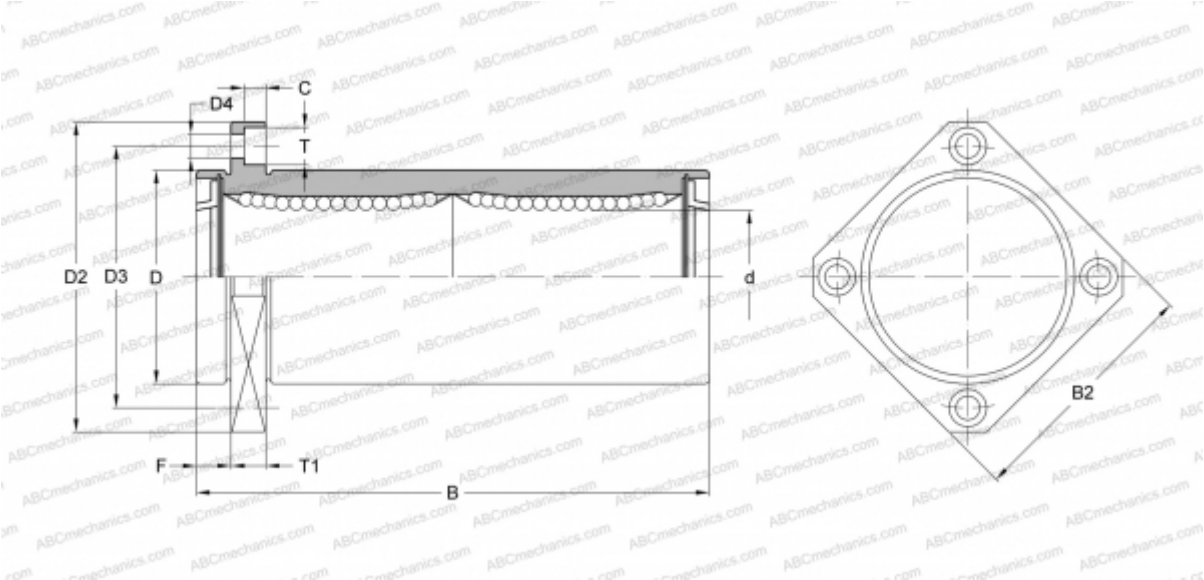


## Technical specification

| DIMENSIONS, MM | |
|---|---|
| d | 13,000 |
| D | 23,000 |
| B | 61,000 |
| D2 | 43,000 |
| D3 | 33,000 |
| D4 | 4,500 |
| B2 | 34,000 |
| T | 8,000 |
| T1 | 6,000 |
| C | 4,400 |
| F | 6 |
| **WEIGHT, KG** | 0,130 |
| **MANUFACTURER** | SAMICK |