LMHP25 UU SAMICK

Linear bushing

TYPE: Shaft guidance systems, Linear bushing, Pilot flange location, Oval type, Type LMHP, Asian standard, Plastic cage (SAMICK)

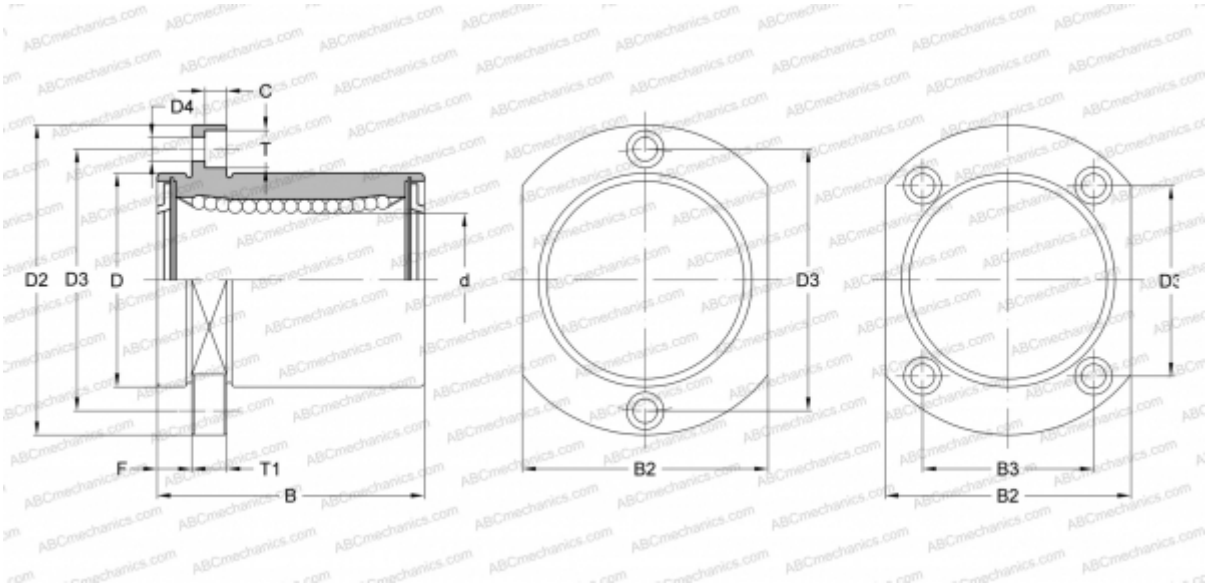

Technical specification

DIMENSIONS, MM	
d	25,000
D	40,000
B	59,000
D2	62,000
D3	40,000
D4	5,500
B2	46,000
B3	32,000
T	9,500
T1	8,000
C	5,400
F	8
WEIGHT, KG	0,340
MANUFACTURER	SAMICK