# LMHP8 UU A SAMICK

Linear bushing

TYPE: Shaft guidance systems, Linear bushing, Pilot flange location, Oval type, Type LMHP, Asian standard, Steel cage (SAMICK)

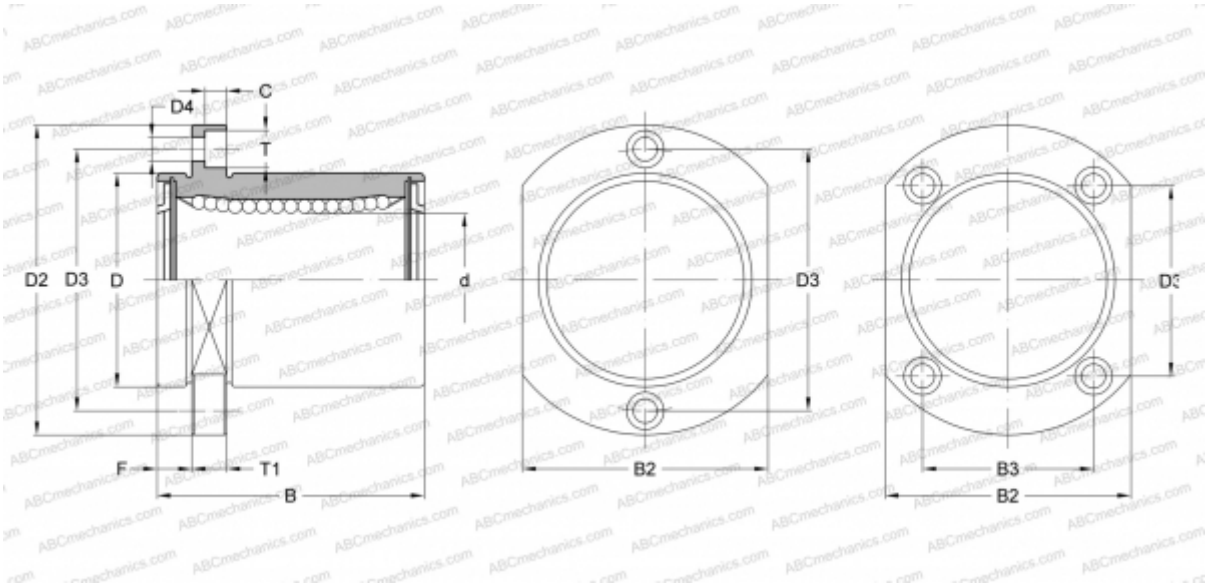


## Technical specification

| DIMENSIONS, MM | |
|---|---|
| d | 8,000 |
| D | 15,000 |
| B | 24,000 |
| D2 | 32,000 |
| D3 | 24,000 |
| D4 | 3,400 |
| B2 | 21,000 |
| T | 6,500 |
| T1 | 5,000 |
| C | 3,300 |
| F | 5 |
| **WEIGHT, KG** | 0,040 |
| **MANUFACTURER** | SAMICK |