LMHP12L UU SAMICK

Linear bushing

TYPE: Shaft guidance systems, Linear bushing, Pilot flange location, Oval type, double length, Type LMHP..L, Asian standard, Plastic cage (SAMICK)

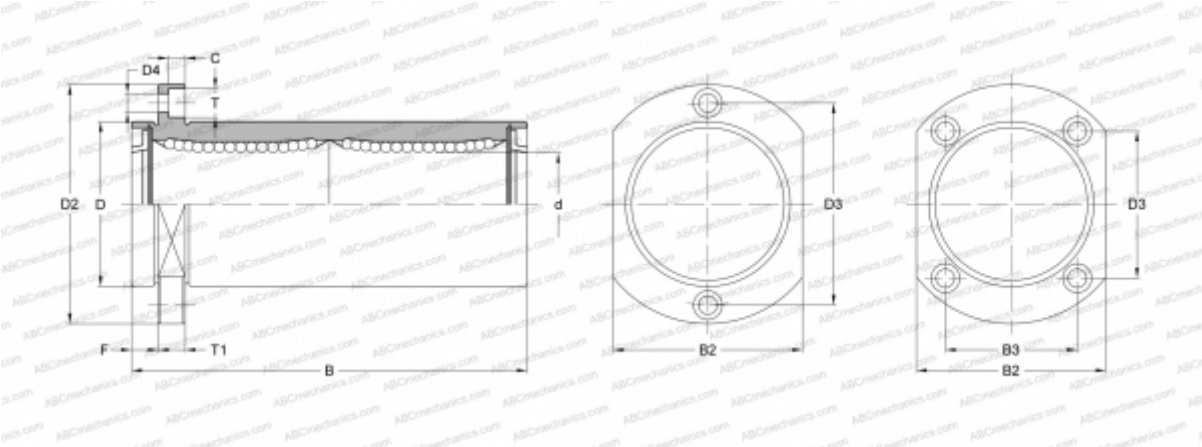

Technical specification

DIMENSIONS, MM	
d	12,000
D	21,000
B	57,000
D2	42,000
D3	32,000
D4	4,500
B2	27,000
T	8,000
T1	6,000
C	4,400
F	6
WEIGHT, KG	0,100
MANUFACTURER	SAMICK