LMFM13 UU A SAMICK

Linear bushing

TYPE: Shaft guidance systems, Linear bushing, Middle flange location, Circular type, Type LMFM, Asian standard, Steel cage (SAMICK)

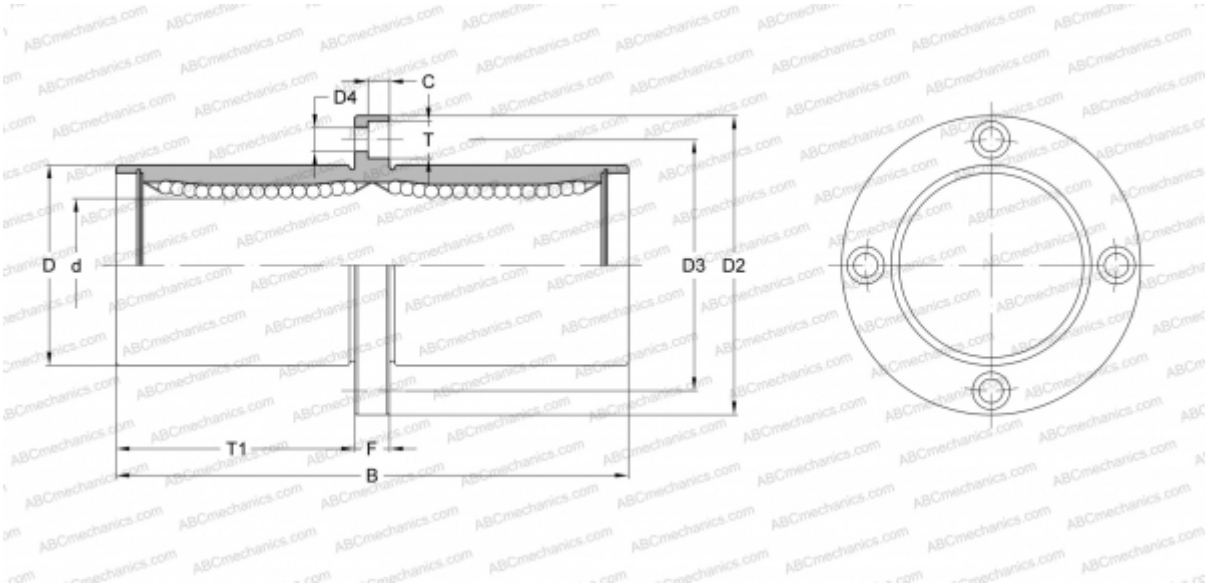

Technical specification

DIMENSIONS, MM	
d	13,000
D	23,000
B	61,000
D2	43,000
D3	33,000
D4	4,500
T	8,000
T1	27,500
C	4,400
F	6
WEIGHT, KG	0,130
MANUFACTURER	SAMICK