LMEKM12 UU SAMICK

Linear bushing

TYPE: Shaft guidance systems, Linear bushing, Middle flange location, Square type, Type LMEKM, European standard, Plastic cage (SAMICK)

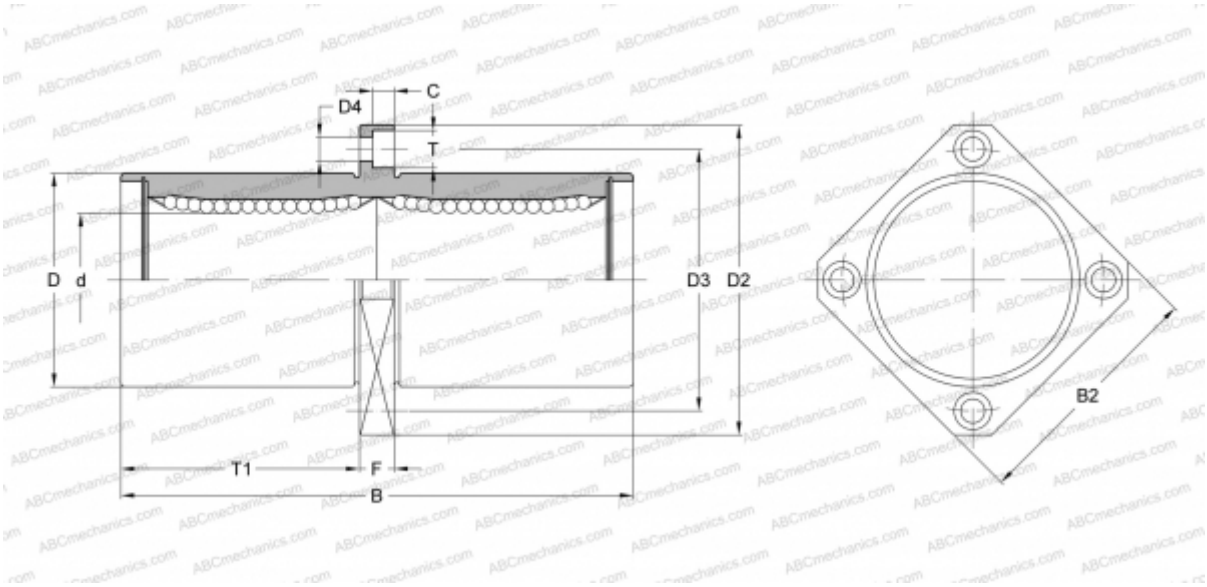

Technical specification

DIMENSIONS, MM	
d	12,000
D	22,000
B	57,000
D2	42,000
D3	32,000
D4	4,500
B2	32,000
T	8,000
T1	25,500
C	4,400
F	6
WEIGHT, KG	0,100
MANUFACTURER	SAMICK