LMKM40 UU SAMICK

Linear bushing

TYPE: Shaft guidance systems, Linear bushing, Middle flange location, Square type, Type LMKM, Asian standard, Plastic cage (SAMICK)

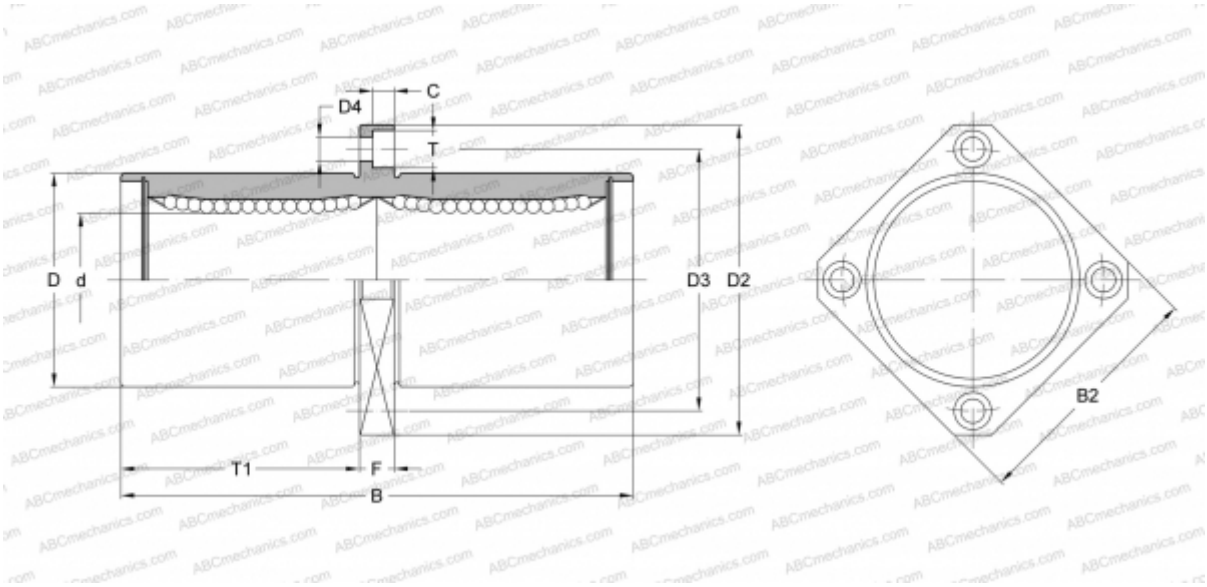

Technical specification

DIMENSIONS, MM	
d	40,000
D	60,000
B	154,000
D2	96,000
D3	78,000
D4	9,000
B2	75,000
T	14,000
T1	70,500
C	8,600
F	13
WEIGHT, KG	2,560
MANUFACTURER	SAMICK