LMKM25 UU A SAMICK

Linear bushing

TYPE: Shaft guidance systems, Linear bushing, Middle flange location, Square type, Type LMKM, Asian standard, Steel cage (SAMICK)

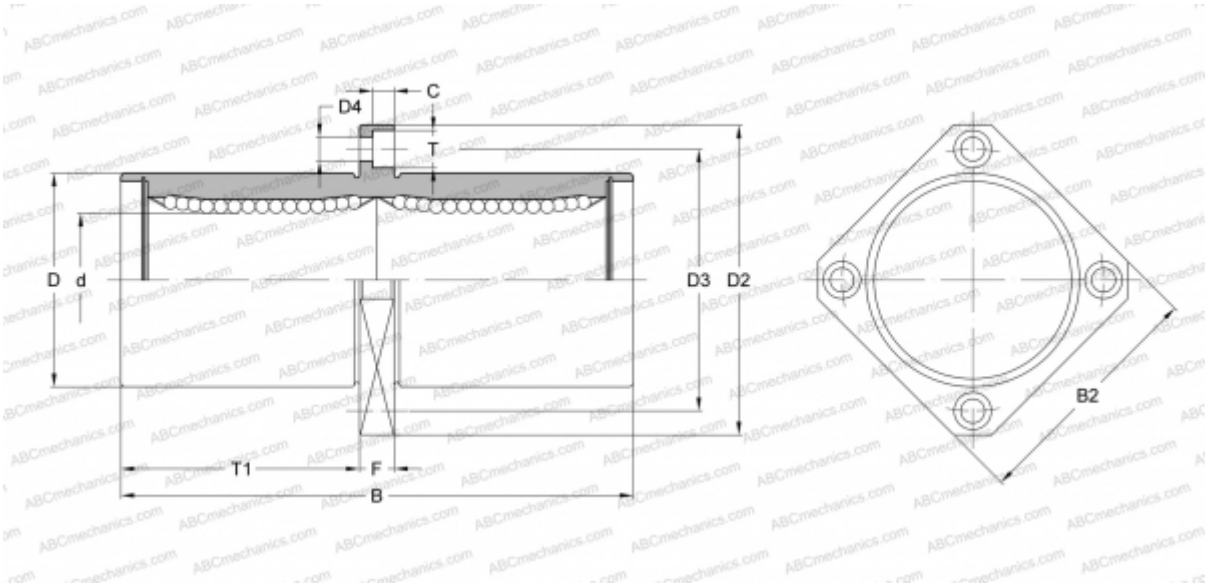

Technical specification

DIMENSIONS, MM	
d	25,000
D	40,000
B	112,000
D2	62,000
D3	51,000
D4	5,500
B2	50,000
T	9,500
T1	52,000
C	5,400
F	8
WEIGHT, KG	0,515
MANUFACTURER	SAMICK