LMHM16 UU A SAMICK

Linear bushing

TYPE: Shaft guidance systems, Linear bushing, Middle flange location, Oval type, Type LMHM, Asian standard, Steel cage (SAMICK)

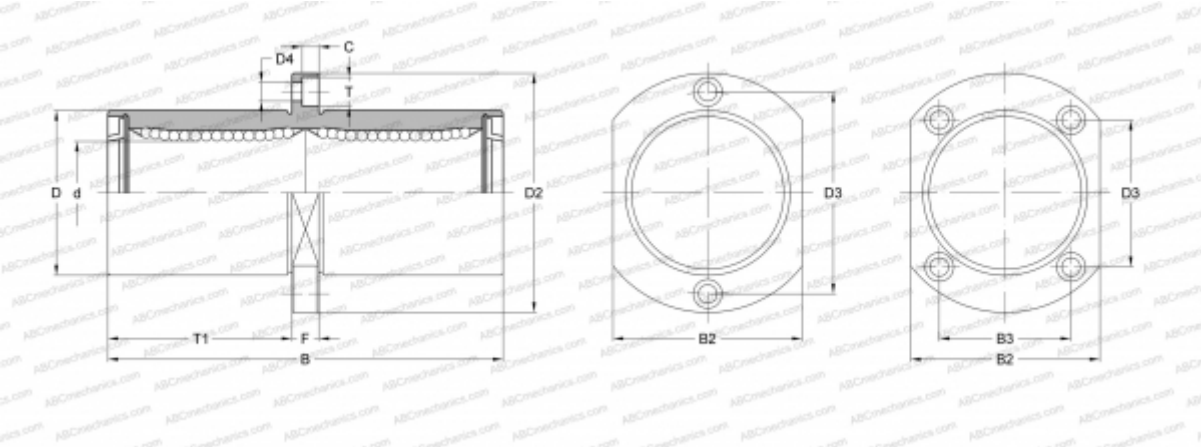

Technical specification

DIMENSIONS, MM	
d	16,000
D	28,000
B	70,000
D2	48,000
D3	31,000
D4	4,500
B2	34,000
B3	22,000
T	8,000
T1	32,000
C	4,400
F	6
WEIGHT, KG	0,187
MANUFACTURER	SAMICK