TW 8 UU NB

Linear bushing

TYPE: Shaft guidance systems, Linear bushing, Self aligning, Close type, Type TW, inch size (NB)

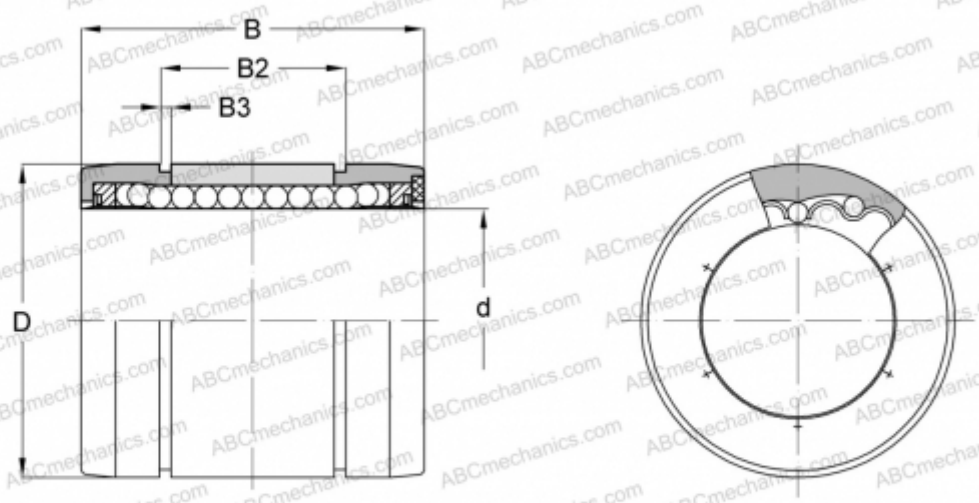

Technical specification

DIMENSIONS, MM	
d	12,700
D	22,225
B	31,750
B2	26,213
B3	1,166
WEIGHT, KG	0,020
MANUFACTURER	NB