TW 20 UU NB

Linear bushing

TYPE: Shaft guidance systems, Linear bushing, Self aligning, Close type, Type TW, inch size (NB)

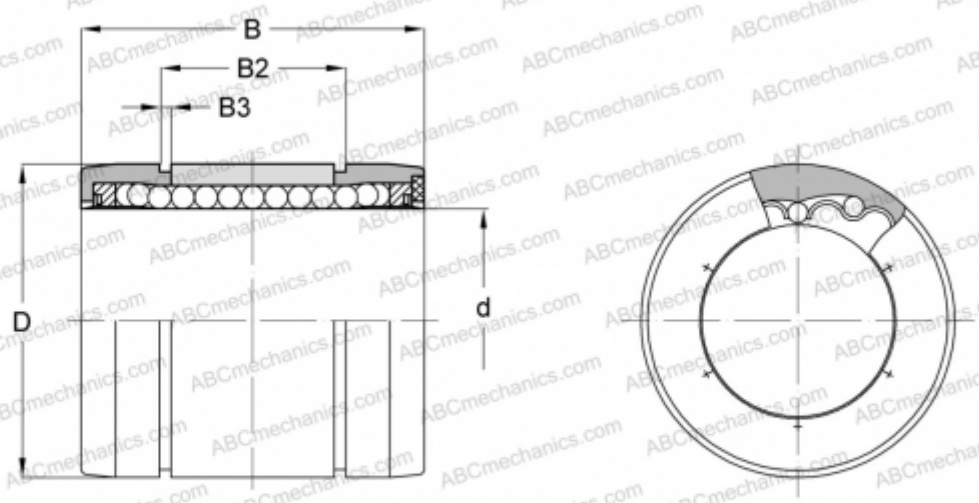

Technical specification

DIMENSIONS, MM	
d	31,750
D	50,800
B	66,675
B2	51,079
B3	1,725
WEIGHT, KG	0,220
MANUFACTURER	NB