TK40 UU SK NB

Linear bushing

TYPE: Shaft guidance systems, Linear bushing, Self aligning, Close type, Type TK, corrosion resistance (NB)

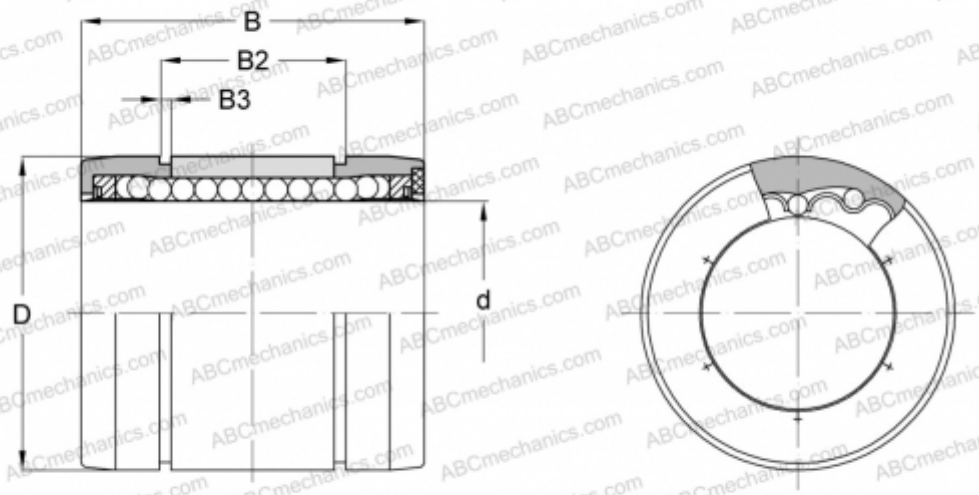

Technical specification

DIMENSIONS, MM	
d	40,000
D	62,000
B	80,000
B2	60,600
B3	2,150
WEIGHT, KG	0,333
MANUFACTURER	NB