TW 4 UU SK NB

Linear bushing

TYPE: Shaft guidance systems, Linear bushing, Self aligning, Close type, Type TW, corrosion resistance, inch size (NB)

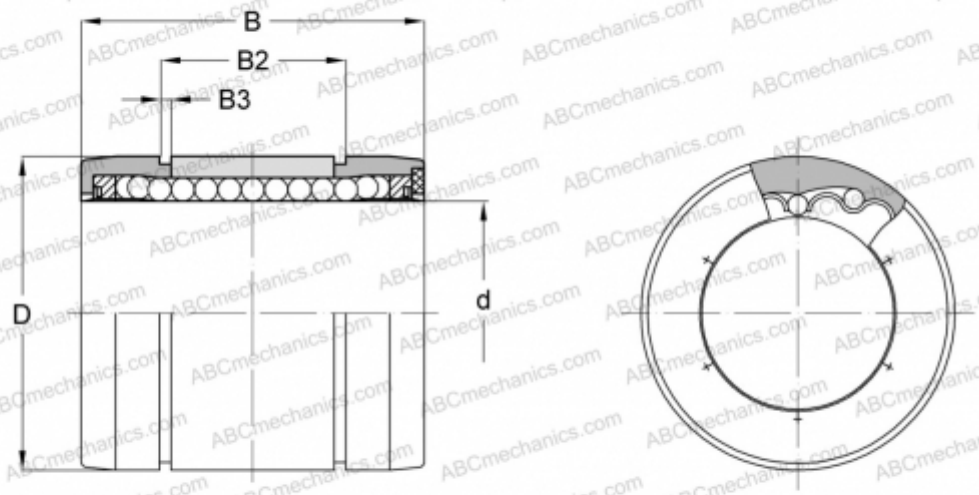

Technical specification

DIMENSIONS, MM	
d	6,350
D	12,700
B	19,050
B2	13,081
B3	0,991
WEIGHT, KG	0,004
MANUFACTURER	NB