TW 12 UU SK NB

Linear bushing

TYPE: Shaft guidance systems, Linear bushing, Self aligning, Close type, Type TW, corrosion resistance, inch size (NB)

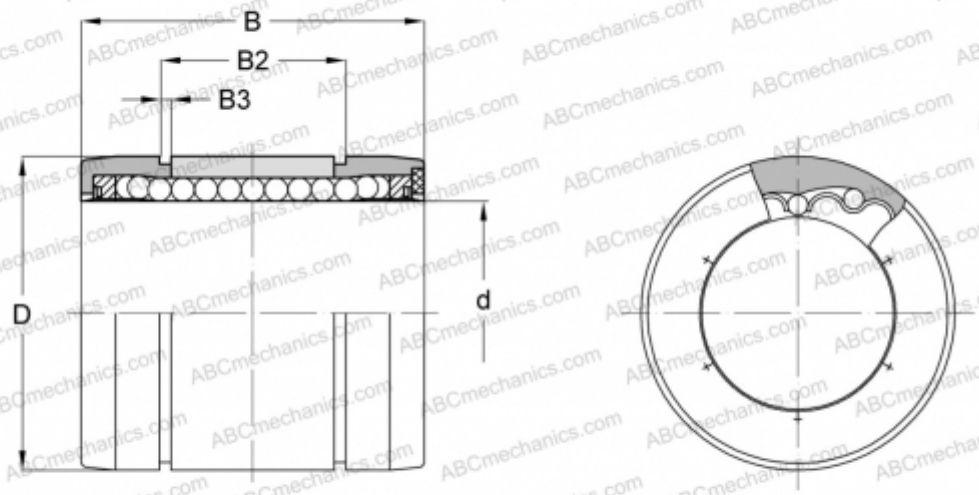

Technical specification

DIMENSIONS, MM	
d	19,050
D	31,750
B	41,275
B2	32,309
B3	1,420
WEIGHT, KG	0,056
MANUFACTURER	NB