SMA 8GWUU NB

Linear bushing, case unit

TYPE: Shaft guidance systems, Linear bushing, case unit, Close type, Double-wide block type, Type SMA ..W, Standart (NB)

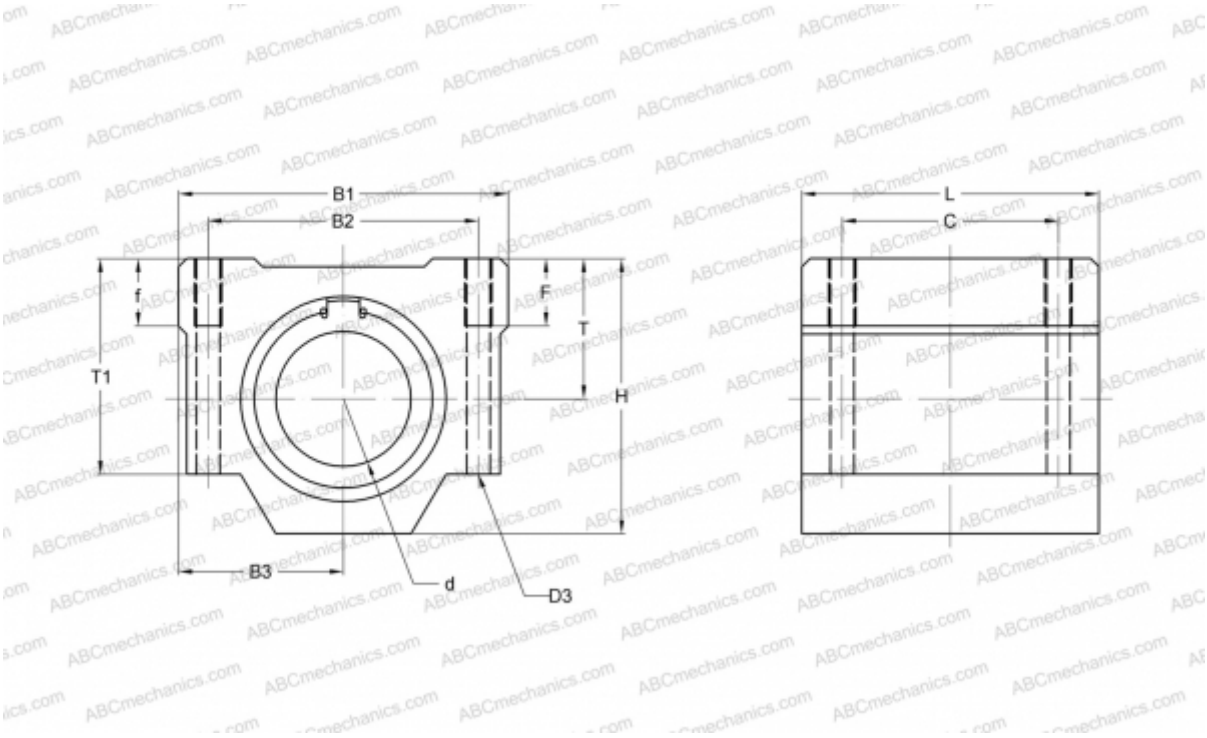

Technical specification

DIMENSIONS, MM	
B1	34,000
H	22,000
L	58,000
d	8,000
D3	3,400
B2	24,000
B3	17,000
T1	18,000
f	6,000
C	42,000
WEIGHT, KG	0,102
MANUFACTURER	NB