SMSJ16GUU NB

Linear bushing, case unit

TYPE: Shaft guidance systems, Linear bushing, case unit, Close type, Clearance adjustable type, Type SMJ, Corrosion resistance (NB)

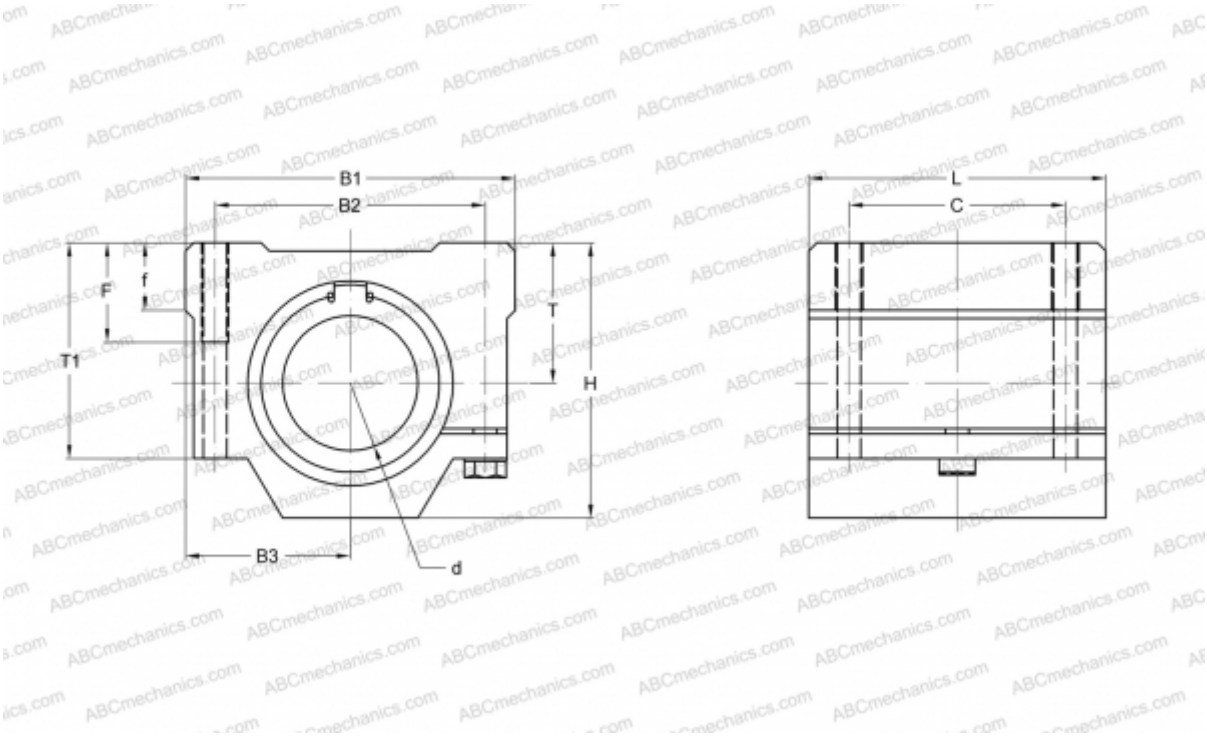

Technical specification

DIMENSIONS, MM	
B1	50,000
H	38,500
L	44,000
d	16,000
B2	36,000
B3	25,000
T	19,000
T1	32,500
f	9,000
C	34,000
F	12
WEIGHT, KG	0,200
MANUFACTURER	NB