RBW 12 NB

Linear bushing, case unit

TYPE: Shaft guidance systems, Pillow block, Type RBW, resin, inch size (NB)

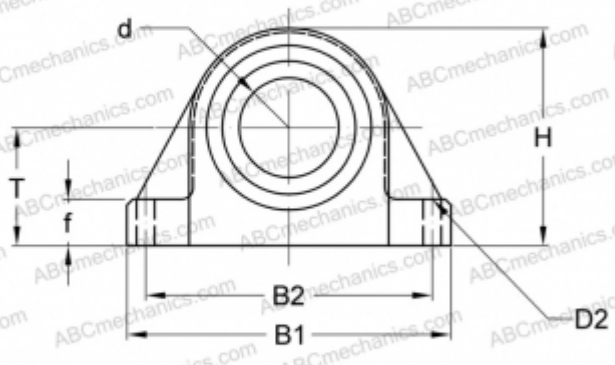

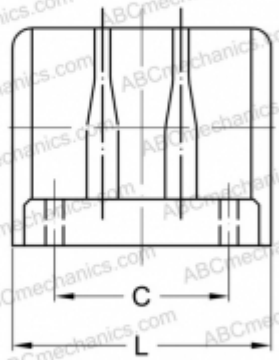

Technical specification

DIMENSIONS, MM	
B1	69,850
H	44,450
L	50,006
d	19,050
D2	4,800
B2	60,325
T	23,800
f	10,319
C	31,750
WEIGHT, KG	0,129
MANUFACTURER	NB