SMP30GUU NB

Linear bushing, case unit

TYPE: Shaft guidance systems, Pillow block, Type SMP (NB)

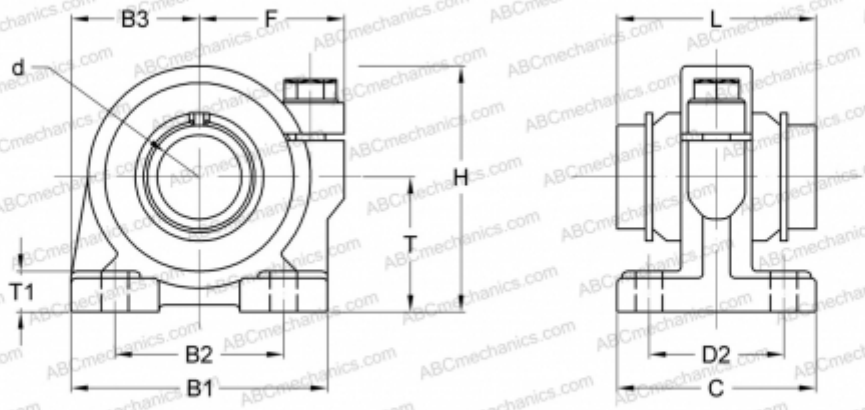

Technical specification

DIMENSIONS, MM	
B1	85,000
H	84,000
L	64,000
d	30,000
D2	46,000
B2	58,000
B3	42,500
T	45,000
T1	15,000
C	69,000
F	49
WEIGHT, KG	1,400
MANUFACTURER	NB