TRT 12GUU NB

Linear bushing

TYPE: Shaft guidance systems, Linear bushing, With flange, Oval type, three length, Type TRT (NB)

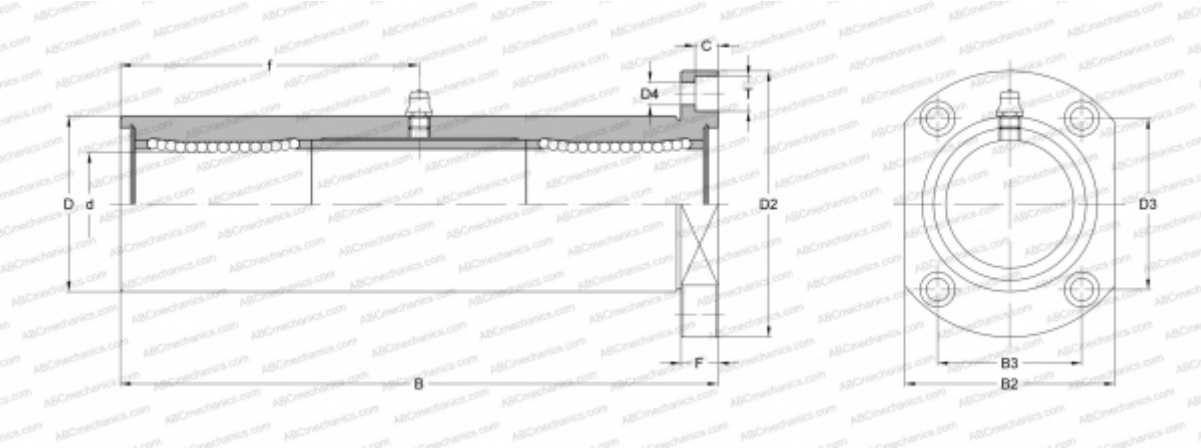

Technical specification

DIMENSIONS, MM	
d	12,000
D	26,000
B	84,000
D2	46,000
D3	28,000
D4	4,500
B2	32,000
B3	22,000
T	7,500
f	41,000
C	4,100
F	6

MANUFACTURER	NB