KBT30GUU NB

Linear bushing

TYPE: Shaft guidance systems, Linear bushing, With flange, Oval type, Type KBT, European standard, Plastic cage (NB)

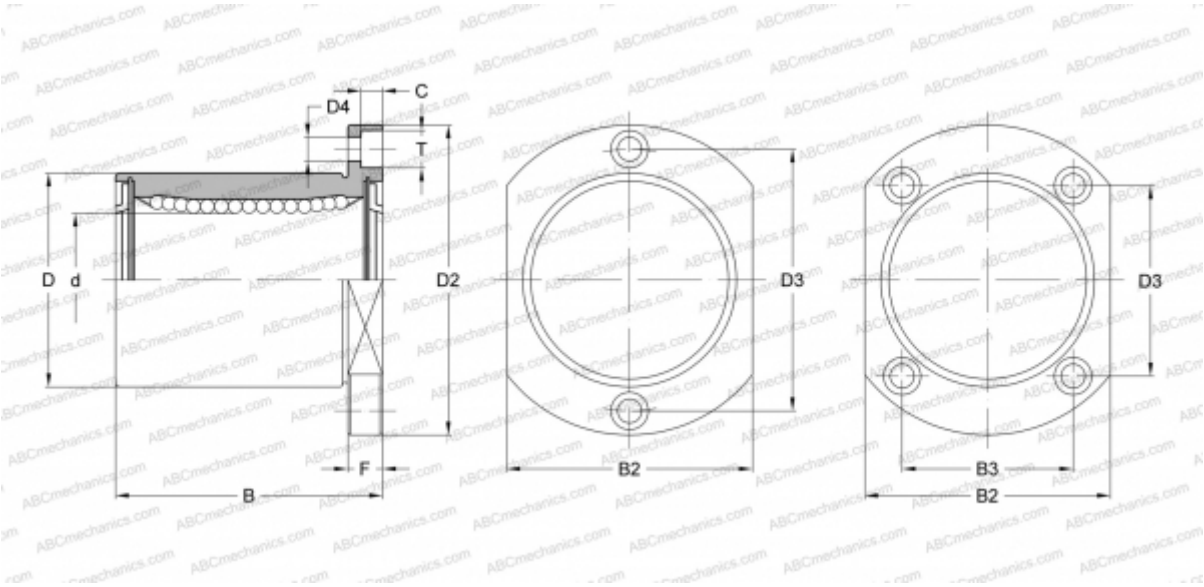

Technical specification

DIMENSIONS, MM	
d	30,000
D	47,000
B	68,000
D2	76,000
D3	48,000
D4	6,600
B2	53,000
B3	38,000
T	11,000
C	6,100
F	10
WEIGHT, KG	0,471
MANUFACTURER	NB