KBST20GUU NB

Linear bushing

TYPE: Shaft guidance systems, Linear bushing, With flange, Oval type, Type KBT, European standard, Corrosion resistance, Plastic cage (NB)

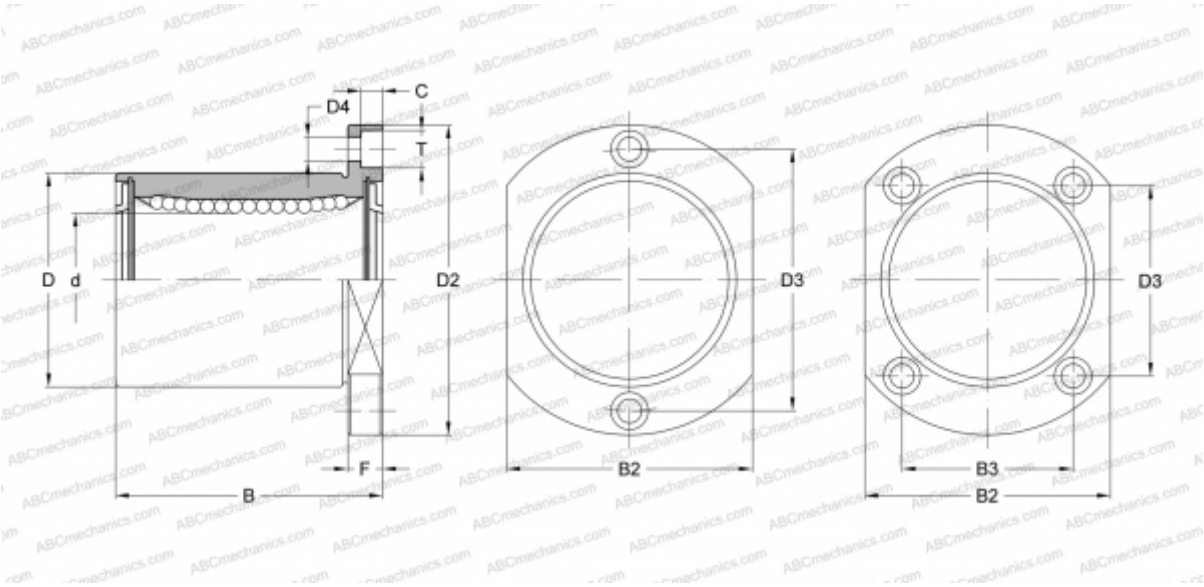

Technical specification

DIMENSIONS, MM	
d	20,000
D	32,000
B	45,000
D2	54,000
D3	36,000
D4	5,500
B2	38,000
B3	24,000
T	9,000
C	5,100
F	8
WEIGHT, KG	0,155
MANUFACTURER	NB